| PLAN GENERAL NOTES | PLAN LEGEND | |
|---|---|---|
| 1. ALL DIMENSIONS ARE FROM FACE OF FRAMING, U.O.N. | Room name 101 | ROOM NAME<br>ROOM NUMBER |
| 2. SEE SHEETS A9.01FOR PARTITION TYPES AND DETAILS. | 1B2A | PARTITION TYPE, SEE A9 SERIES |
| 3. SEE SHEET A11.02 AND A11.03 FOR DOOR & WINDOW TYPES & SCHEDULES. | 101 | DOOR NUMBER, SEE A11 SERIES |

NOT FOR CONSTRUCTION

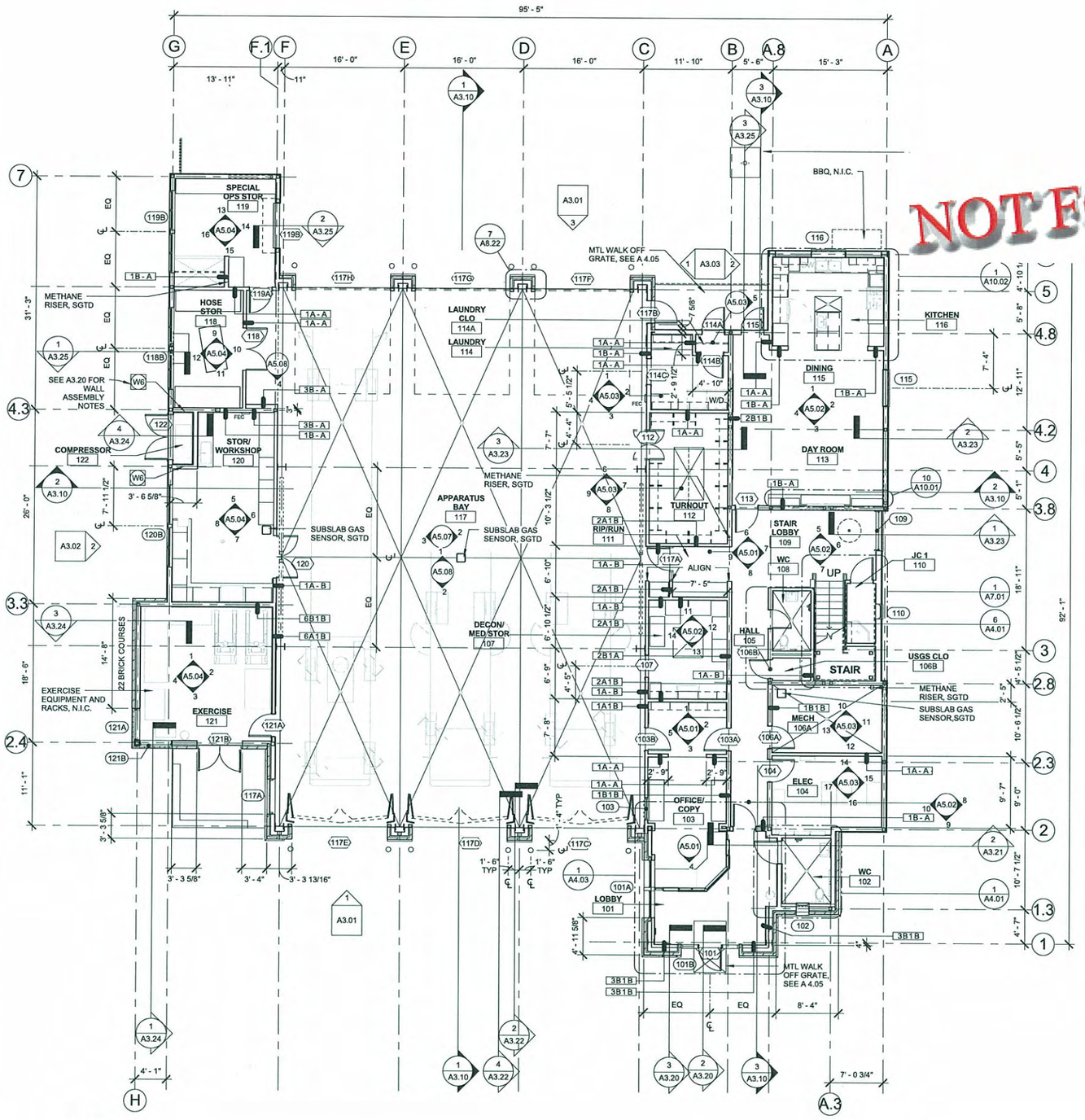


1 LEVEL 1
1/8" = 1'-0"

BSA ARCHITECTS

BULL STOCKWELL ALLEN
A California Corporation
501 Folsom Street, Fourth Floor
San Francisco, CA 94105
415-281-4720


# MOUNTAIN VIEW FIRE STATION #5

2195 N SHORELINE BLVD
MOUNTAIN VIEW, CA

Date 12 . 23 . 09

PERMIT SET

Sheet Title:
LEVEL 1 FLOOR PLAN


© 2009 BSA Architects
" All drawings and written material appearing herein constitute the original and unpublished work of the architect and the same may not be duplicated, used, or disclosed without the written consent of the architect. "


Drawn By: AR
Checked By: GJ
Job Number: 20808.00

Sheet A2.01

12/22/2009 4:02:20 PM

C:\Local Files\MVFS_LOCAL_AR.rvt

PIN#- 7779-1 A2.01

| PLAN GENERAL NOTES | PLAN LEGEND | |
|---|---|---|
| 1. ALL DIMENSIONS ARE FROM FACE OF FRAMING, U.O.N. | Room name 101 | ROOM NAME<br>ROOM NUMBER |
| 2. SEE SHEETS A9.01FOR PARTITION TYPES AND DETAILS. | 1B2A | PARTITION TYPE, SEE A9 SERIES |
| 3. SEE SHEET A11.02 AND A11.03 FOR DOOR & WINDOW TYPES & SCHEDULES. | 101 | DOOR NUMBER, SEE A11 SERIES |

NOT FOR CONSTRUCTION

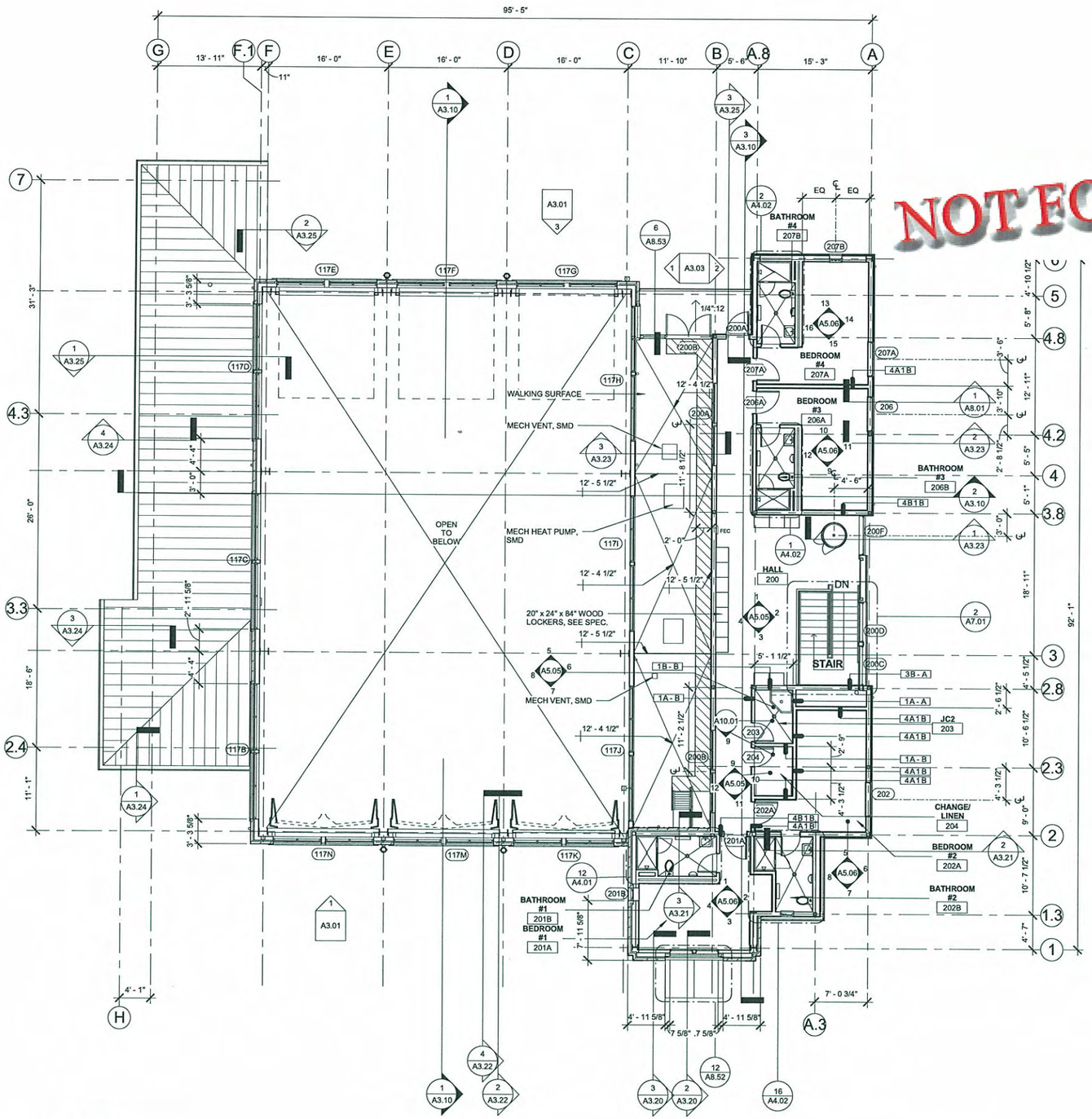


1 LEVEL 2
1/8" = 1'-0"

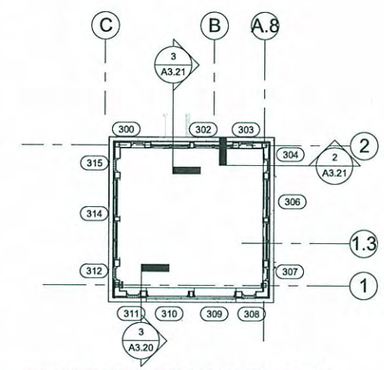

2 TOWER ATTIC PLAN @ WINDOWS
1/8" = 1'-0"

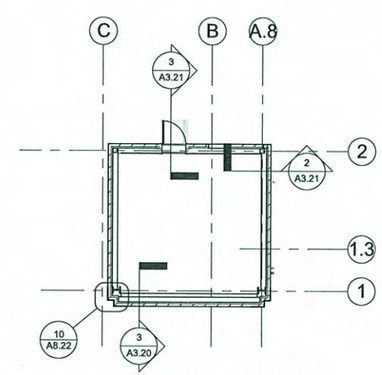

3 TOWER ATTIC PLAN @ FLOOR
1/8" = 1'-0"

0' 4' 8' 16' 32'

BSA ARCHITECTS

BULL STOCKWELL ALLEN
A California Corporation
501 Folsom Street, Fourth Floor
San Francisco, CA 94105
415-281-4720

# MOUNTAIN VIEW FIRE STATION #5

2195 N SHORELINE BLVD
MOUNTAIN VIEW, CA

Date 12 . 23 . 09

PERMIT SET

Sheet Title:
LEVEL 2 FLOOR PLAN

© 2009 BSA Architects
" All drawings and written material appearing herein constitute the original and unpublished work of the architect and the same may not be duplicated, used, or disclosed without the written consent of the architect. "

| | | |
|---|---|---|
| Drawn By: | AR | Sheet |
| Checked By: | GJ | A2.02 |
| Job Number: | 20808.00 | |

12/22/2009 4:02:34 PM

C:\Local Files\MVFS_LOCAL_AR.rvt

PIN#- 7779-1 A2.02

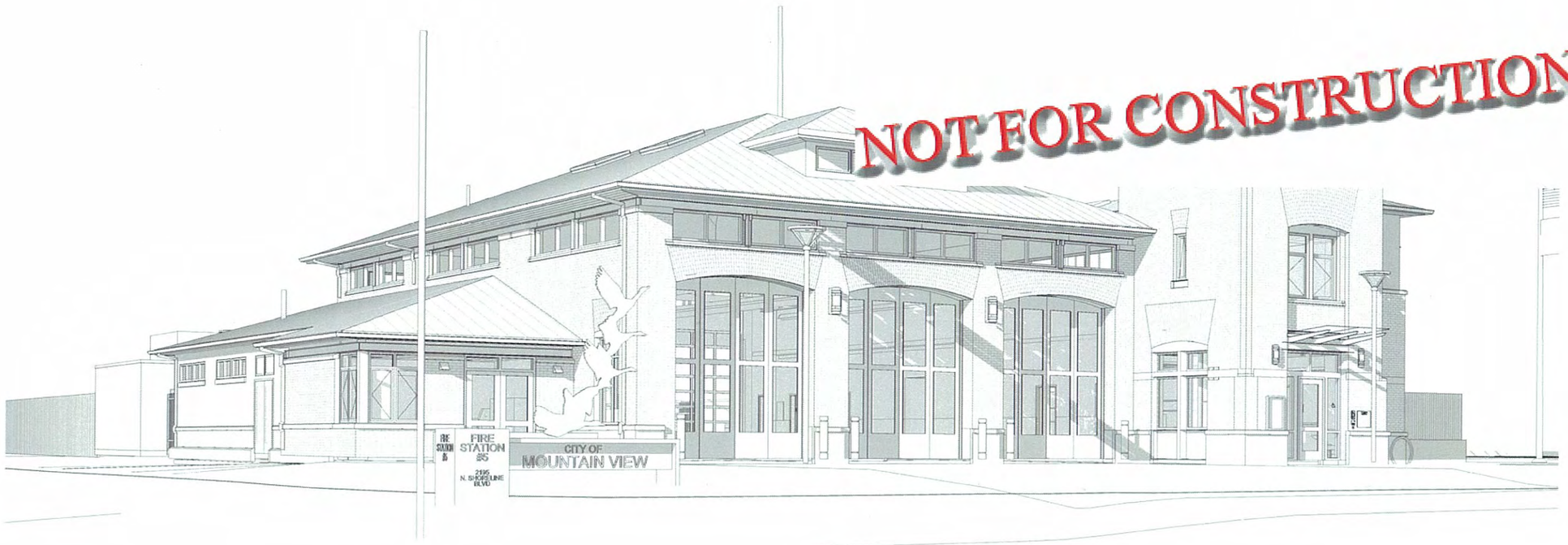


NOT FOR CONSTRUCTION

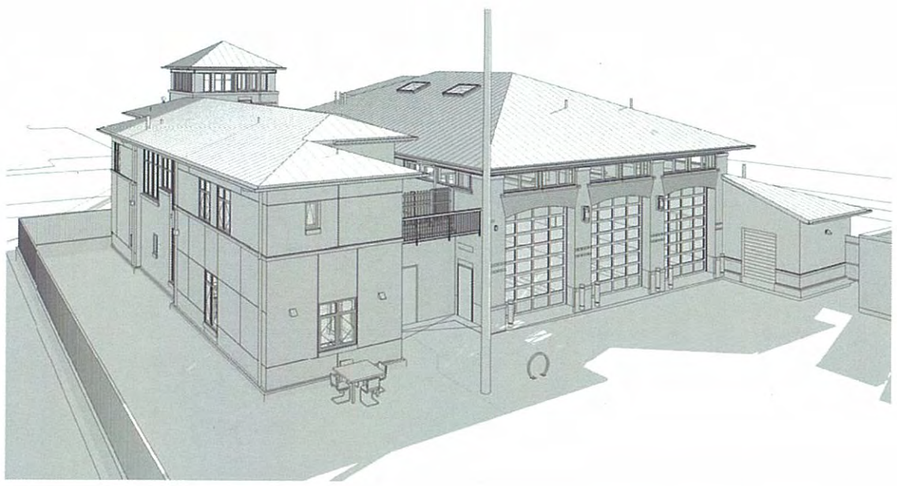

BSA ARCHITECTS

BULL STOCKWELL ALLEN
A California Corporation
501 Folsom Street, Fourth Floor
San Francisco, CA 94105
415-281-4720

MOUNTAIN VIEW FIRE
STATION #5
2195 N SHORELINE BLVD
MOUNTAIN VIEW, CA

Date 12 . 23 . 09

PERMIT SET

Sheet Title:
EXTERIOR
VIEWS
FOR
REFERENCE
ONLY

© 2009 BSA Architects
" All drawings and written material appearing herein constitute the original and unpublished work of the architect and the same may not be duplicated, used, or disclosed without the written consent of the architect. "

Drawn By: AR
Checked By: GJ
Job Number: 20808.00

Sheet
A3.00

12/22/2009 4:21:07 PM

C:\Local Files\MVFS_LOCAL_AR.rvt

PIN#- 7779-1 A3.00

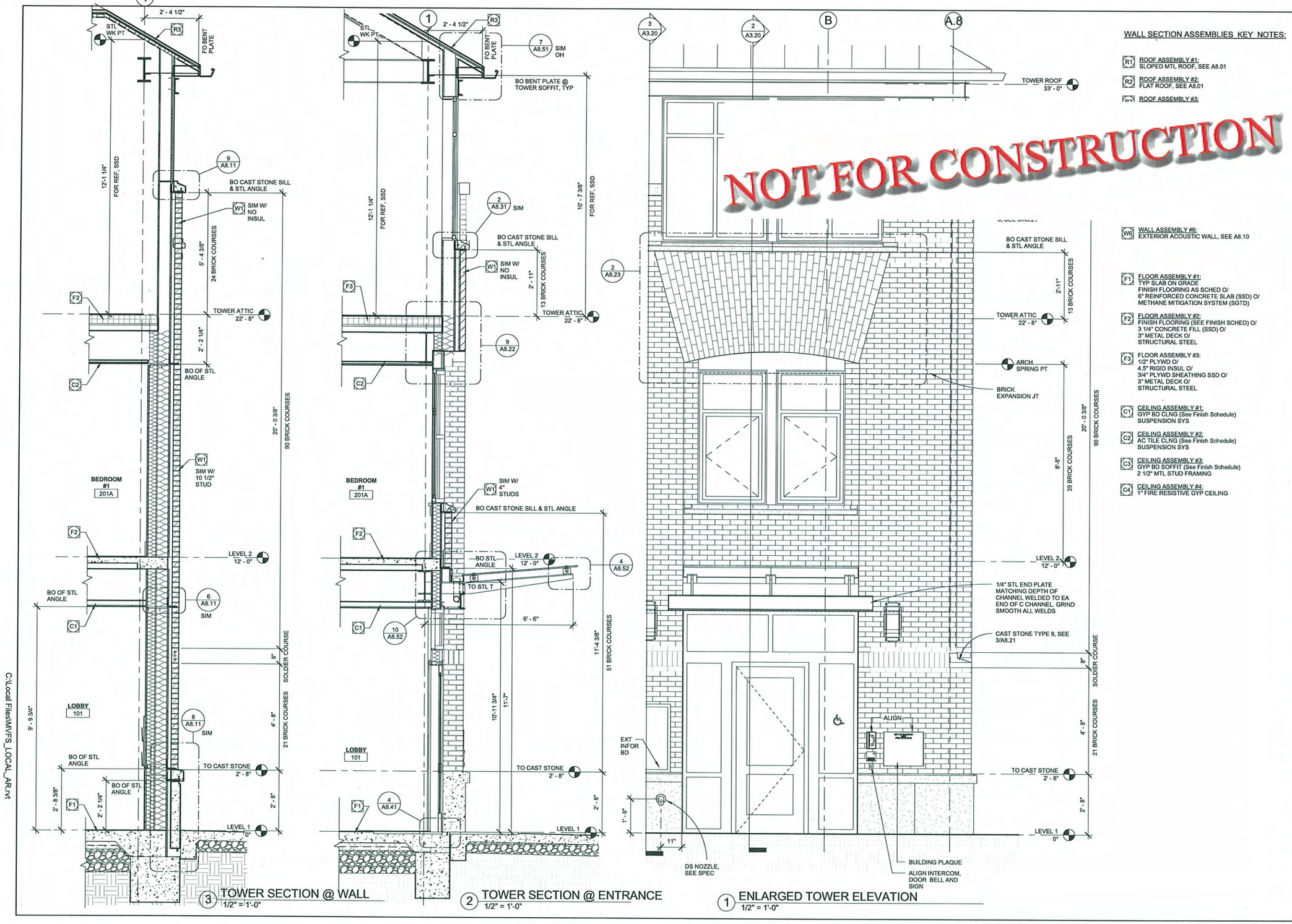


3 TOWER SECTION @ WALL
1/2" = 1'-0"

2 TOWER SECTION @ ENTRANCE
1/2" = 1'-0"

1 ENLARGED TOWER ELEVATION
1/2" = 1'-0"

## WALL SECTION ASSEMBLIES KEY NOTES:

R1 ROOF ASSEMBLY #1:
SLOPED MTL ROOF, SEE A8.01

R2 ROOF ASSEMBLY #2:
FLAT ROOF, SEE A8.01

R3 ROOF ASSEMBLY #3:

W6 WALL ASSEMBLY #6:
EXTERIOR ACOUSTIC WALL, SEE A8.10

F1 FLOOR ASSEMBLY #1:
TYP SLAB ON GRADE
FINISH FLOORING AS SCHED O/
6" REINFORCED CONCRETE SLAB (SSD) O/
METHANE MITIGATION SYSTEM (SGTD)

F2 FLOOR ASSEMBLY #2:
FINISH FLOORING (SEE FINISH SCHED) O/
3 1/4" CONCRETE FILL (SSD) O/
3" METAL DECK O/
STRUCTURAL STEEL

F3 FLOOR ASSEMBLY #3:
1/2" PLYWD O/
4.5" RIGID INSUL O/
3/4" PLYWD SHEATHING SSD O/
3" METAL DECK O/
STRUCTURAL STEEL

C1 CEILING ASSEMBLY #1:
GYP BD CLNG (See Finish Schedule)
SUSPENSION SYS

C2 CEILING ASSEMBLY #2:
AC TILE CLNG (See Finish Schedule)
SUSPENSION SYS

C3 CEILING ASSEMBLY #3:
GYP BD SOFFIT (See Finish Schedule)
2 1/2" MTL STUD FRAMING

C4 CEILING ASSEMBLY #4:
1" FIRE RESISTIVE GYP CEILING

BSA ARCHITECTS
BULL STOCKWELL ALLEN
A California Corporation
501 Folsom Street, Fourth Floor
San Francisco, CA 94105
415-281-4720

# MOUNTAIN VIEW FIRE STATION #5

2195 N SHORELINE BLVD
MOUNTAIN VIEW, CA

Date 12 . 23 . 09

PERMIT SET

Sheet Title:
WALL SECTIONS

© 2009 BSA Architects
" All drawings and written material appearing herein constitute the original and unpublished work of the architect and the same may not be duplicated, used, or disclosed without the written consent of the architect. "

Drawn By: AR/WC
Checked By: GJ
Job Number: 20808.00
Sheet A3.20

12/22/2009 4:22:20 PM

C:\Local Files\MVFS_LOCAL_AR.rvt

PIN#- 7779-1 A3.20

SEE A3.20 FOR TYP WALL SECTION ASSEMBLY KEY NOTES

NOT FOR CONSTRUCTION

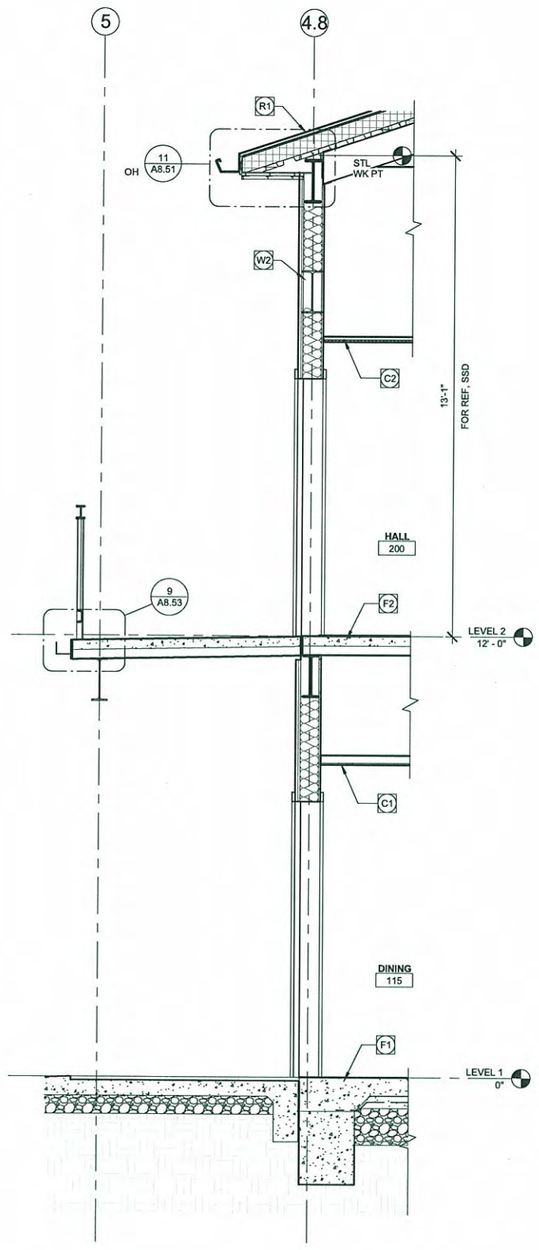


3 NORTH ENTRY WALL SECTION
1/2" = 1'-0"

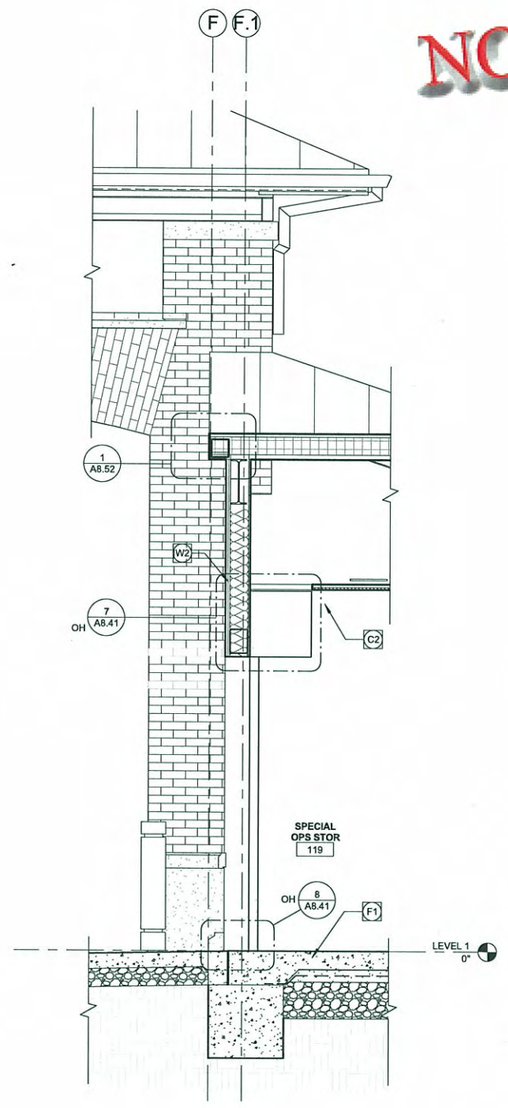


2 HAZMAT WALL SECTION
1/2" = 1'-0"

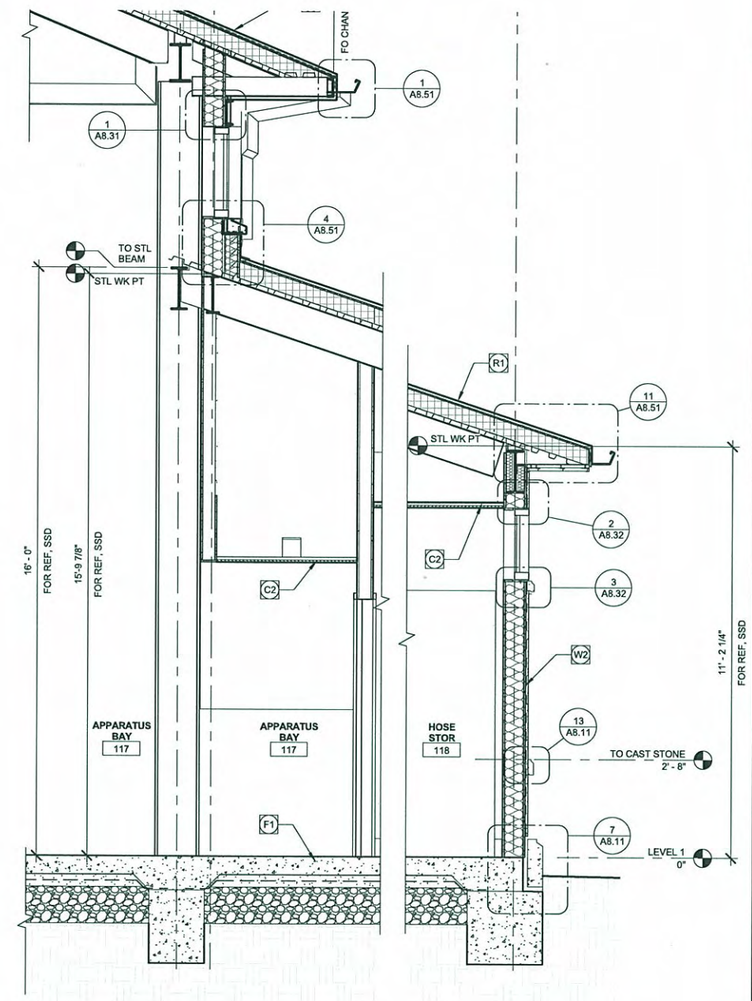


1 HOSE ROOM WALL SECTION
1/2" = 1'-0"

BSA ARCHITECTS


BULL STOCKWELL ALLEN
A California Corporation
501 Folsom Street, Fourth Floor
San Francisco, CA 94105
415-281-4720


MOUNTAIN VIEW FIRE
STATION #5
2195 N SHORELINE BLVD
MOUNTAIN VIEW, CA

Date 12 . 23 . 09

PERMIT SET

Sheet Title:
WALL
SECTIONS


© 2009 BSA Architects
" All drawings and written material appearing herein constitute the original and unpublished work of the architect and the same may not be duplicated, used, or disclosed without the written consent of the architect. "


Drawn By: WC
Checked By: Checker
Job Number: 20808.00
Sheet
A3.25

C:\Local Files\MVFS_LOCAL_AR.rvt

12/22/2009 4:23:05 PM

PIN#- 7779-1 A3.25

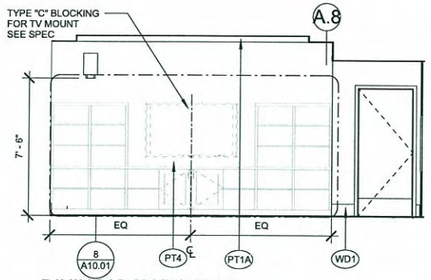


3 DINING/ DAY ROOM S
1/4" = 1'-0"

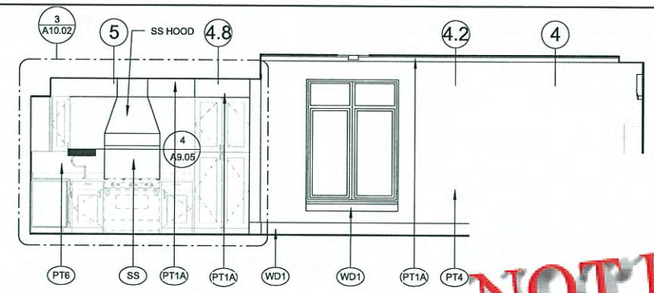


2 DINING/ DAY ROOM E
1/4" = 1'-0"

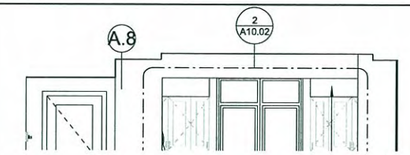


NOT FOR CONSTRUCTION

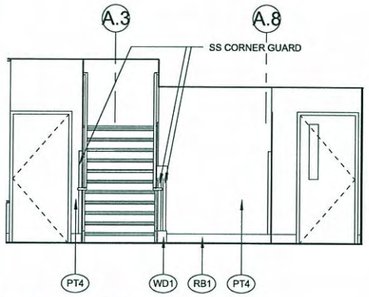


7 STAIR LOBBY S
1/4" = 1'-0"

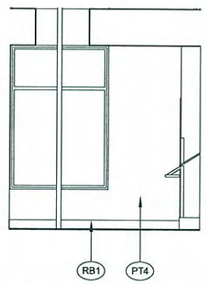


6 STAIR LOBBY E
1/4" = 1'-0"

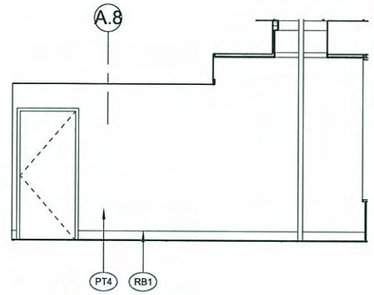


5 STAIR LOBBY N
1/4" = 1'-0"

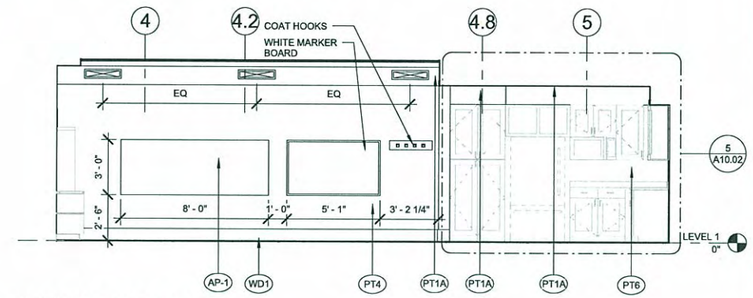


4 DINING/ DAY ROOM W
1/4" = 1'-0"

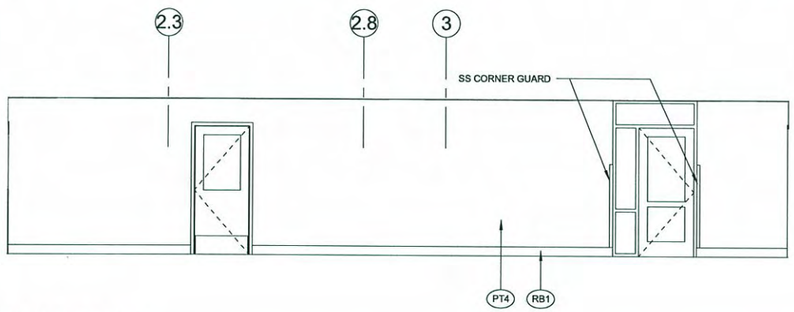


10 HALL ELEV W
1/4" = 1'-0"

9 HALL ELEV S
1/4" = 1'-0"

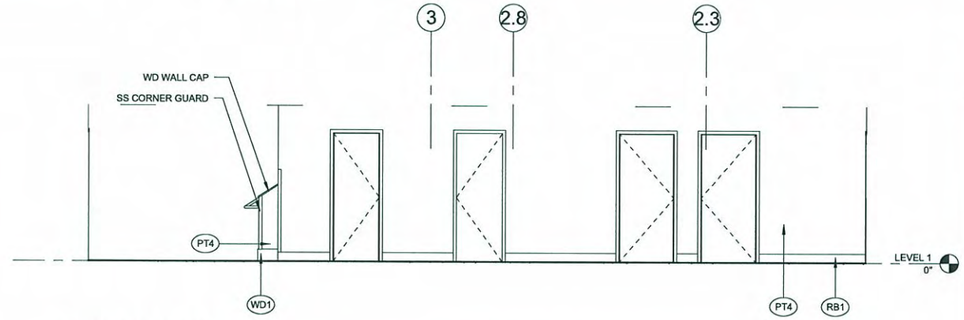


8 HALL ELEV E
1/4" = 1'-0"

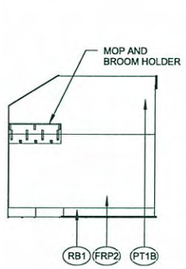


18 JC 1 ELEV W
1/4" = 1'-0"

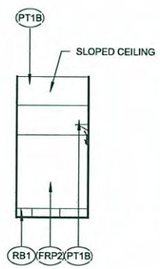


17 JC 1 ELEV S
1/4" = 1'-0"

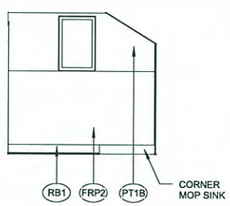


16 JC 1 ELEV E
1/4" = 1'-0"

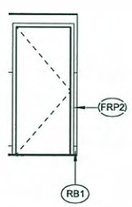


15 JC 1 ELEV N
1/4" = 1'-0"

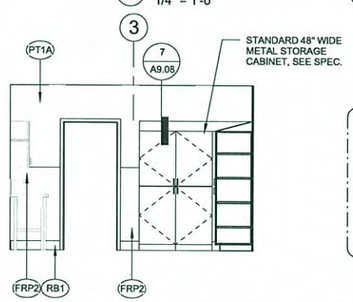


14 DECON/ MED STORAGE W
1/4" = 1'-0"

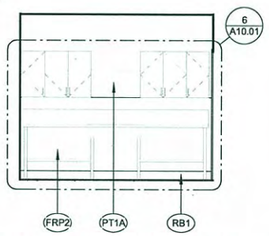


13 DECON/ MED STORAGE S
1/4" = 1'-0"

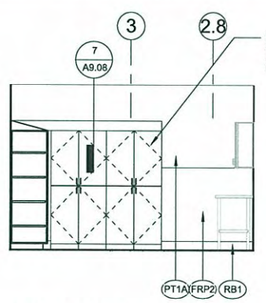


12 DECON/ MED STORAGE E
1/4" = 1'-0"

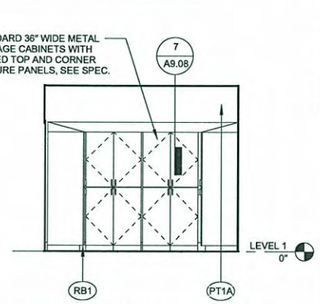


11 DECON/ MED STORAGE N
1/4" = 1'-0"

BSA ARCHITECTS
BULL STOCKWELL ALLEN
A California Corporation
501 Folsom Street, Fourth Floor
San Francisco, CA 94105
415-281-4720

MOUNTAIN VIEW FIRE
STATION #5
2195 N SHORELINE BLVD
MOUNTAIN VIEW, CA

Date 12 . 23 . 09

PERMIT SET

Sheet Title:
INTERIOR
ELEVATIONS

© 2009 BSA Architects
" All drawings and written material appearing herein constitute the original and unpublished work of the architect and the same may not be duplicated, used, or disclosed without the written consent of the architect. "

Drawn By: AR
Checked By: GJ
Job Number: 20808.00
Sheet A5.02

12/22/2009 4:24:16 PM

C:\Local Files\MVFS_LOCAL_AR.rvt

PIN#- 7779-1 A5.02

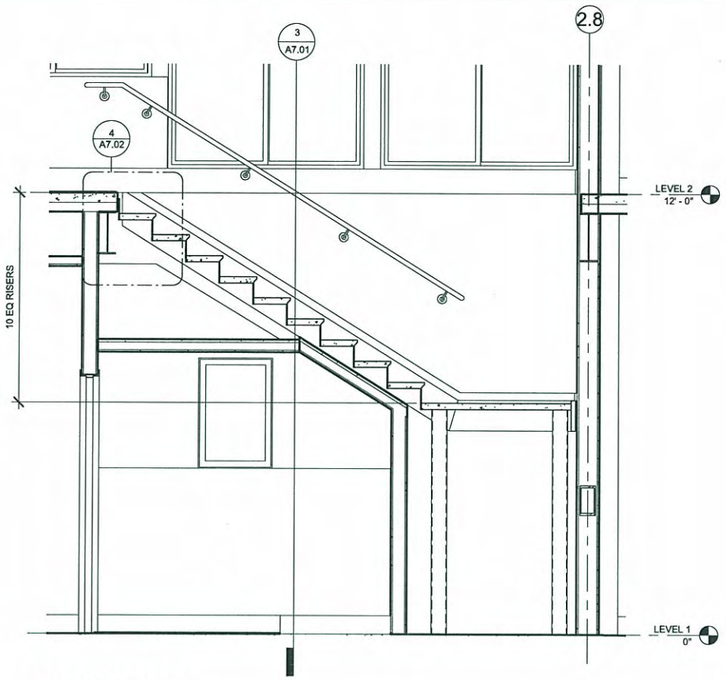


4 STAIR SECTION
1/2" = 1'-0"

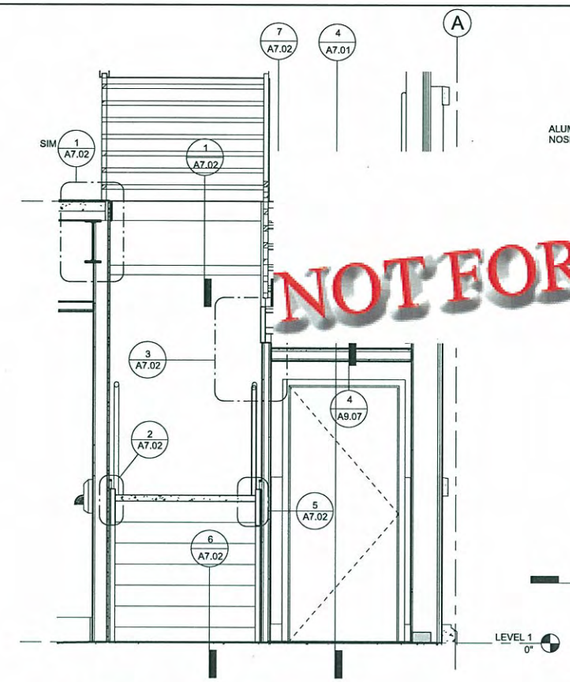


3 STAIR CROSS SECTION
1/2" = 1'-0"

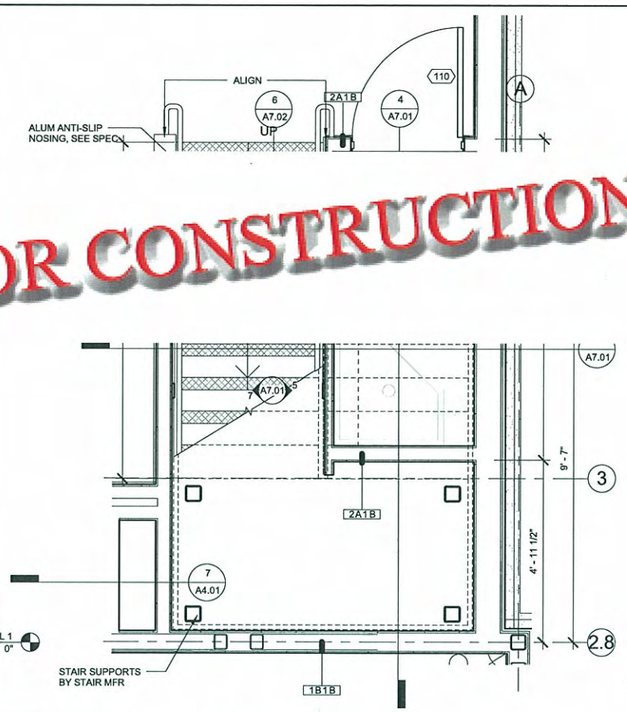


1 ENLARGED PLAN- LEVEL 1 STAIR
1/2" = 1'-0"

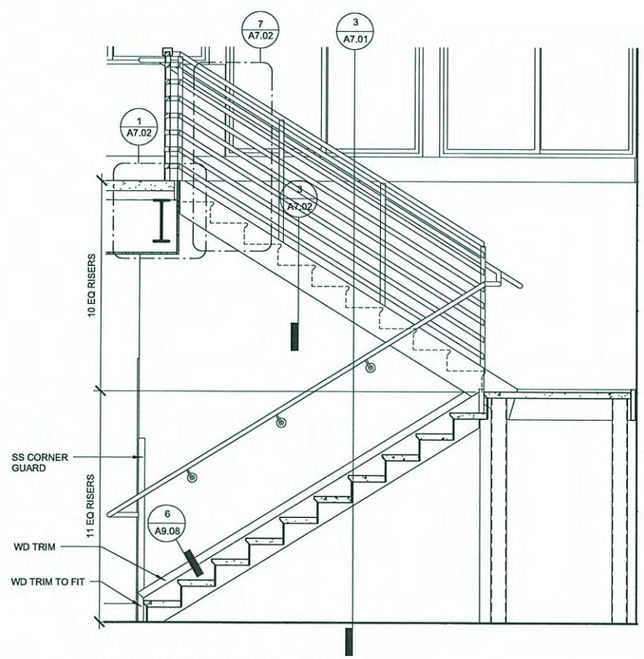


5 STAIR GAURDRAIL ELEV B
1/2" = 1'-0"

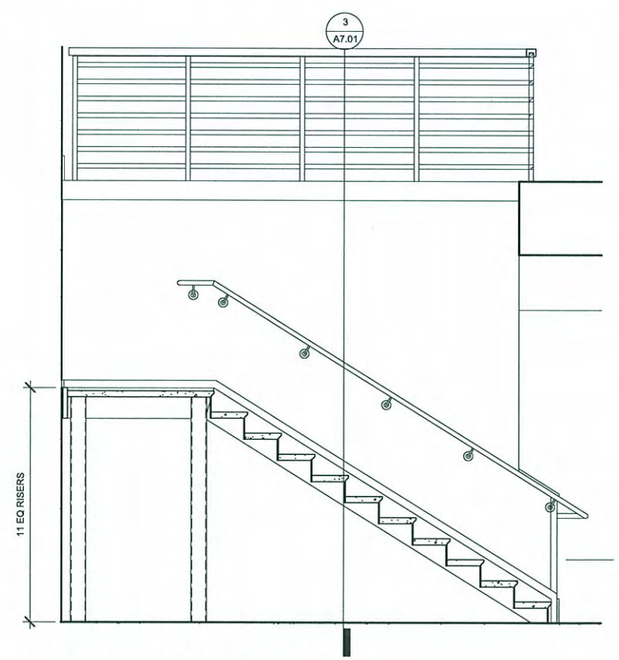


7 STAIR GAURDRAIL ELEV D
1/2" = 1'-0"

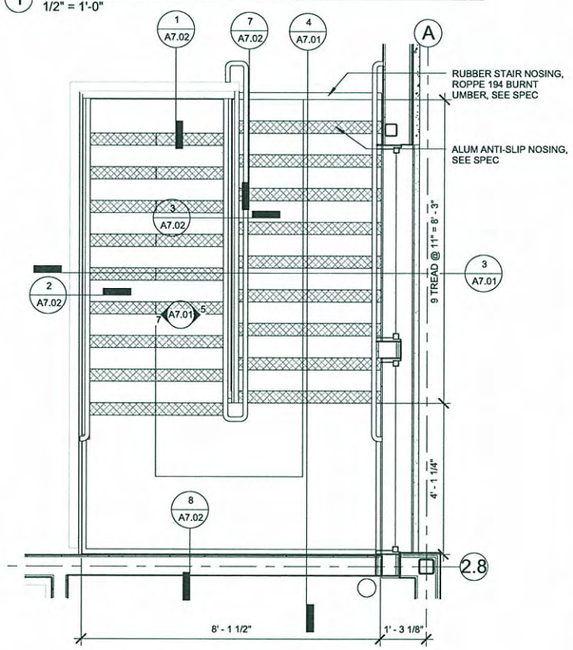


2 ENLARGED PLAN- LEVEL 2 STAIR
1/2" = 1'-0"

NOT FOR CONSTRUCTION


BSA ARCHITECTS

BULL STOCKWELL ALLEN
A California Corporation
501 Folsom Street, Fourth Floor
San Francisco, CA 94105
415-281-4720


MOUNTAIN VIEW FIRE
STATION #5
2195 N SHORELINE BLVD
MOUNTAIN VIEW, CA

Date 12 . 23 . 09

PERMIT SET

Sheet Title:
STAIR PLANS
AND SECTIONS


© 2009 BSA Architects
" All drawings and written material appearing herein constitute the original and unpublished work of the architect and the same may not be duplicated, used, or disclosed without the written consent of the architect. "


Drawn By: AR
Checked By: GJ
Job Number: 20808.00

Sheet
A7.01

12/22/2009 4:36:47 PM

C:\Local Files\MVFS_LOCAL_AR.rvt

PIN#- 7779-1 A7.01

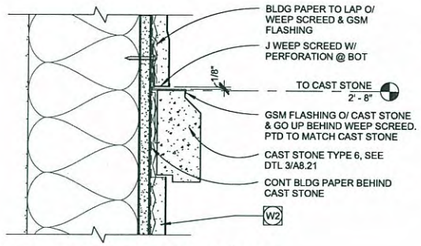


13 CAST STONE @ CEM PLAS WALL
3" = 1'-0"

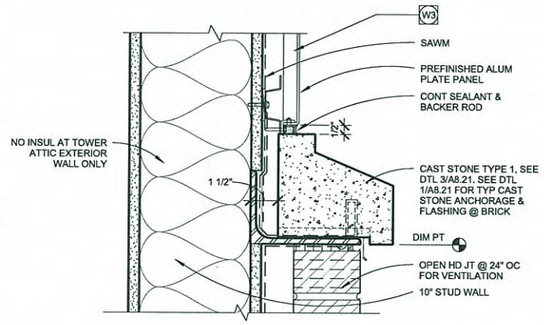


9 MTL PANEL TRANSITION @ CAST STONE
3" = 1'-0"

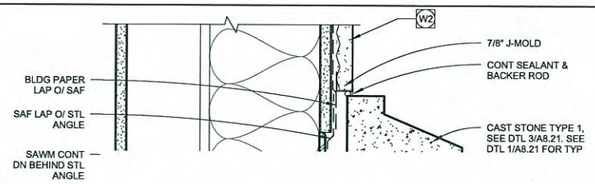


5 CE
3" =

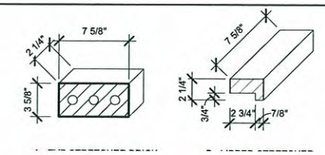


NOT FOR CONSTRUCTION

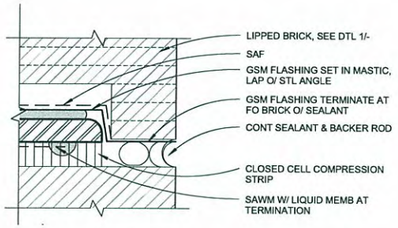


14 ENLARGED FLASHING TERMINATION @ BRICK
12" = 1'-0"

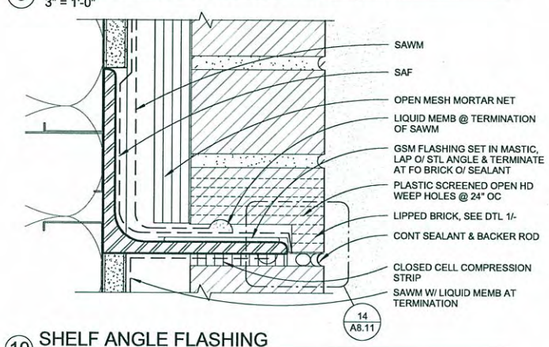


10 SHELF ANGLE FLASHING
6" = 1'-0"

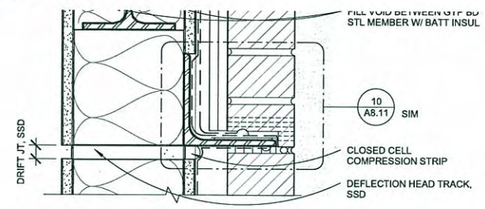


6 BRICK EXP JT @ LEVEL 2
3" = 1'-0"

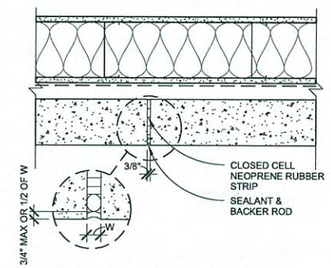


1 STANDARD & CUSTOM BRICK SHAPES
1 1/2" = 1'-0"

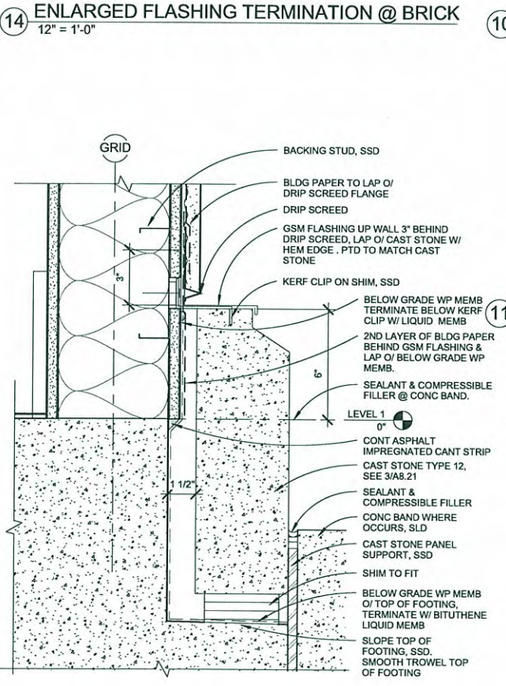


7 CAST STONE BASE @ CEM PLAS WALL
3" = 1'-0"

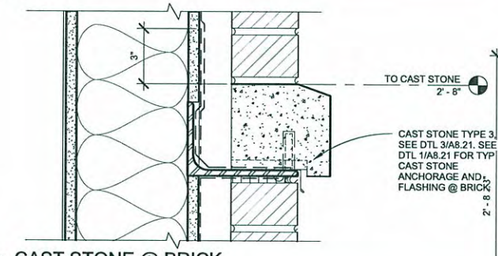


11 CAST STONE @ BRICK
3" = 1'-0"

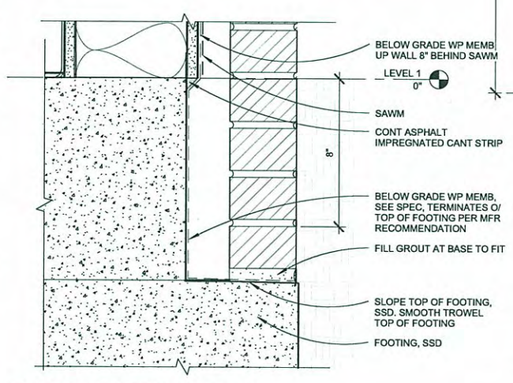


12 BRICK BASE BELOW GRADE
3" = 1'-0"

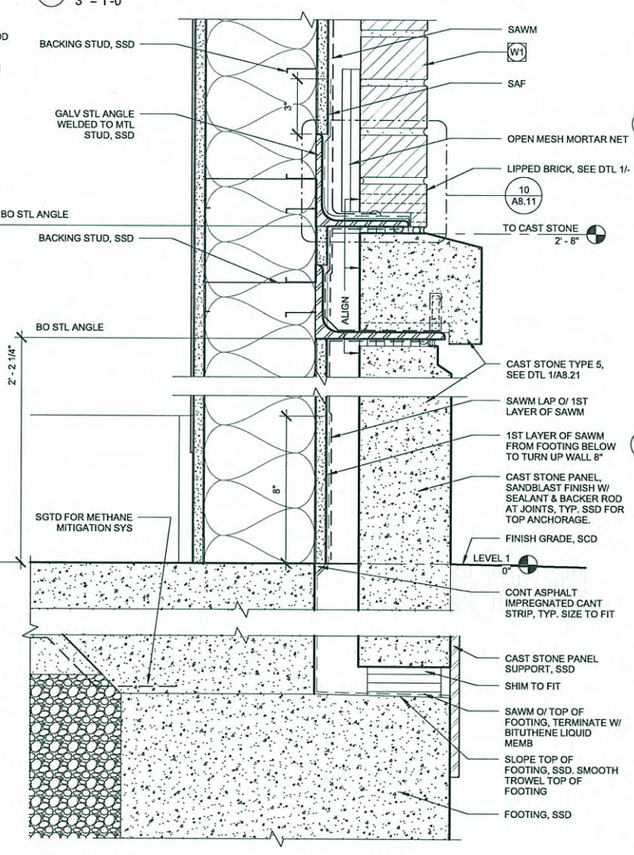


8 TYP CAST STONE BASE @ EXT WALL
3" = 1'-0"

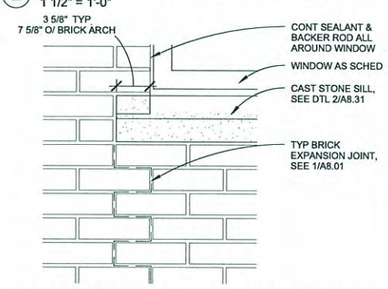


2 TYP CAST STONE JOINT
1 1/2" = 1'-0"

3 TYP BRICK EXP JOINT AT WINDOW
1 1/2" = 1'-0"

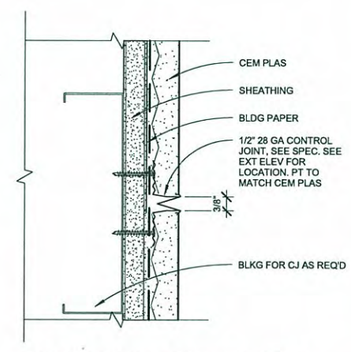


4 TYP CEM PLAS CONTROL JOINT
6" = 1'-0"

BSA ARCHITECTS
BULL STOCKWELL ALLEN
A California Corporation
501 Folsom Street, Fourth Floor
San Francisco, CA 94105
415-281-4720

MOUNTAIN VIEW FIRE STATION #5
2195 N SHORELINE BLVD
MOUNTAIN VIEW, CA

Date 12 . 23 . 09

PERMIT SET

Sheet Title:
EXTERIOR DETAILS - FOUNDATION & WALL

© 2009 BSA Architects
" All drawings and written material appearing herein constitute the original and unpublished work of the architect and the same may not be duplicated, used, or disclosed without the written consent of the architect. "

Drawn By: WC
Checked By: Checker
Job Number: 20808.00
Sheet A8.11

12/22/2009 4:26:11 PM

C:\Local Files\MVFS_LOCAL_AR.rvt

PIN#- 7779-1 A8.11

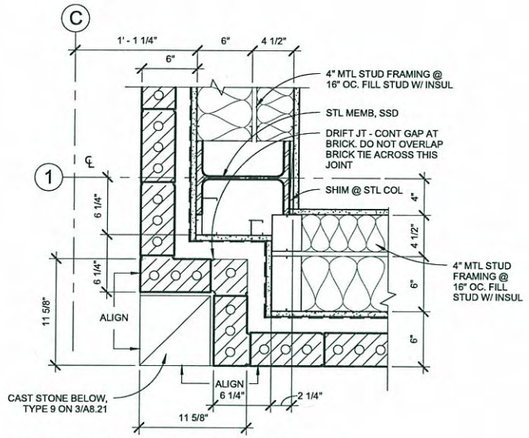


10 TOWER CORNER PLAN SECTION
1 1/2" = 1'-0"

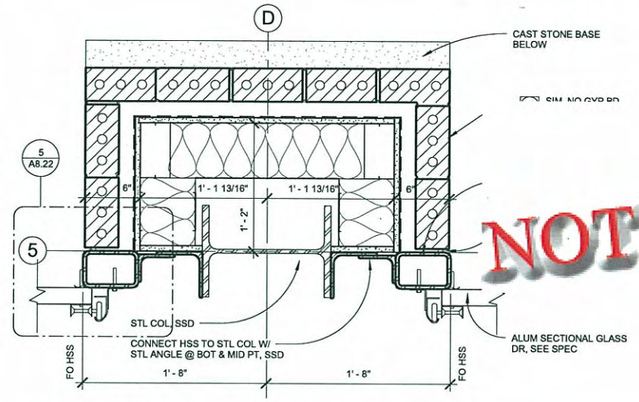


7 COLUMN PLAN @ SECTIONAL DOOR
1 1/2" = 1'-0"

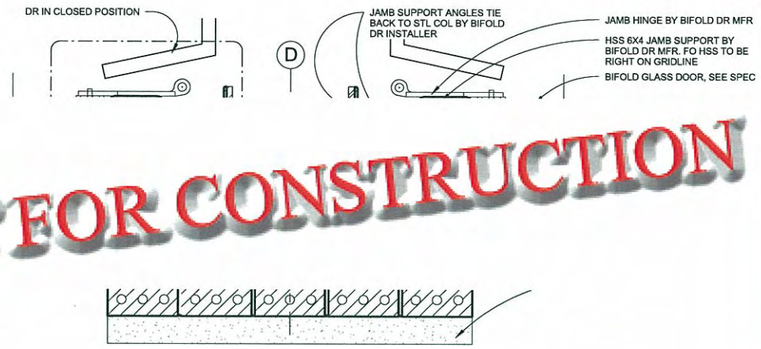


1 COLUMN PLAN @ APPARATUS BAY - BIFOLD DR
1 1/2" = 1'-0"

NOT FOR CONSTRUCTION

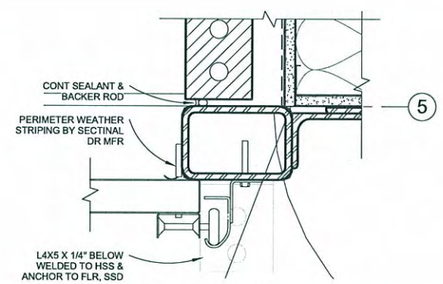


5 ENLARGED JAMB @ SECT DR
3" = 1'-0"

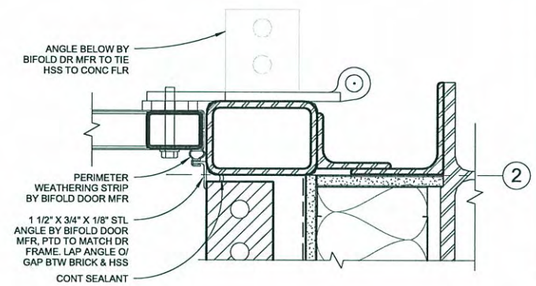


2 ENLARGED JAMB @ BI-FOLD DR
3" = 1'-0"

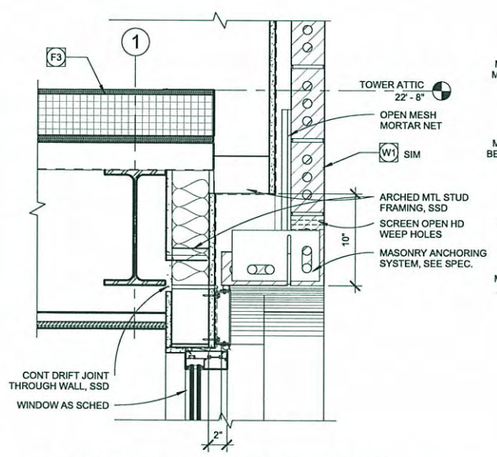


9 BRICK ARCH HD @ TOWER WINDOW
1 1/2" = 1'-0"

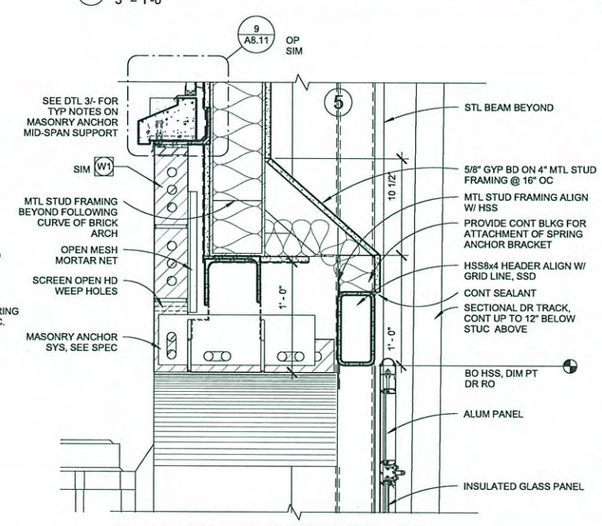


6 BRICK ARCH HD @ SECTIONAL DR
1 1/2" = 1'-0"

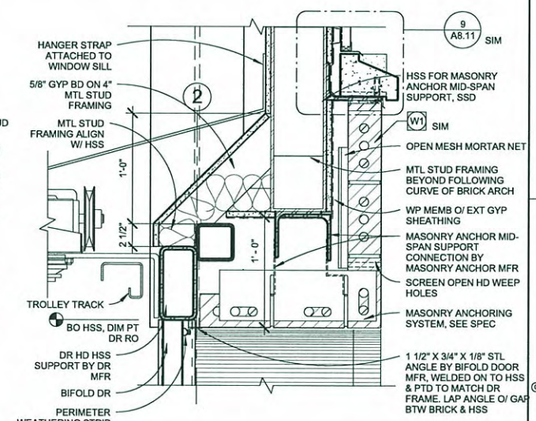


3 BRICK ARCH HD @ BIFOLD DR
1 1/2" = 1'-0"


BSA ARCHITECTS
BULL STOCKWELL ALLEN
A California Corporation
501 Folsom Street, Fourth Floor
San Francisco, CA 94105
415-281-4720


MOUNTAIN VIEW FIRE STATION #5
2195 N SHORELINE BLVD
MOUNTAIN VIEW, CA

Date 12 . 23 . 09

PERMIT SET

Sheet Title:
EXTERIOR DETAILS - WALL


© 2008 BSA Architects
" All drawings and written material appearing herein constitute the original and unpublished work of the architect and the same may not be duplicated, used, or disclosed without the written consent of the architect. "


Drawn By: WC
Checked By: Checker
Job Number: 20808.00
Sheet A8.22

12/22/2009 4:26:54 PM

C:\Local Files\MVFS_LOCAL_AR.rvt

PIN#- 7779-1

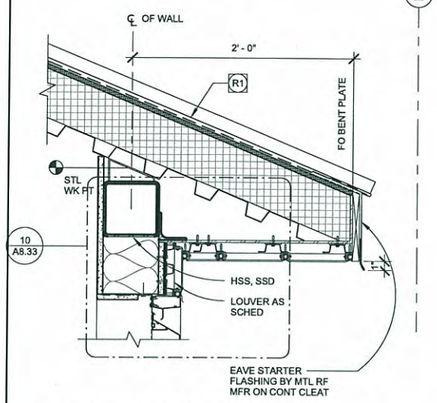


10 EAVE @ DORMER
1 1/2" = 1'-0"

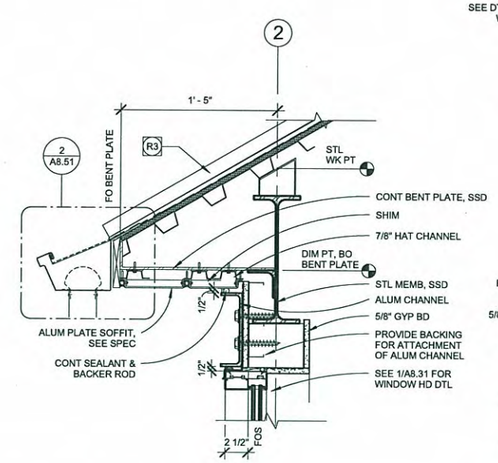


7 EAVE @ NORTH TOWER
1 1/2" = 1'-0"

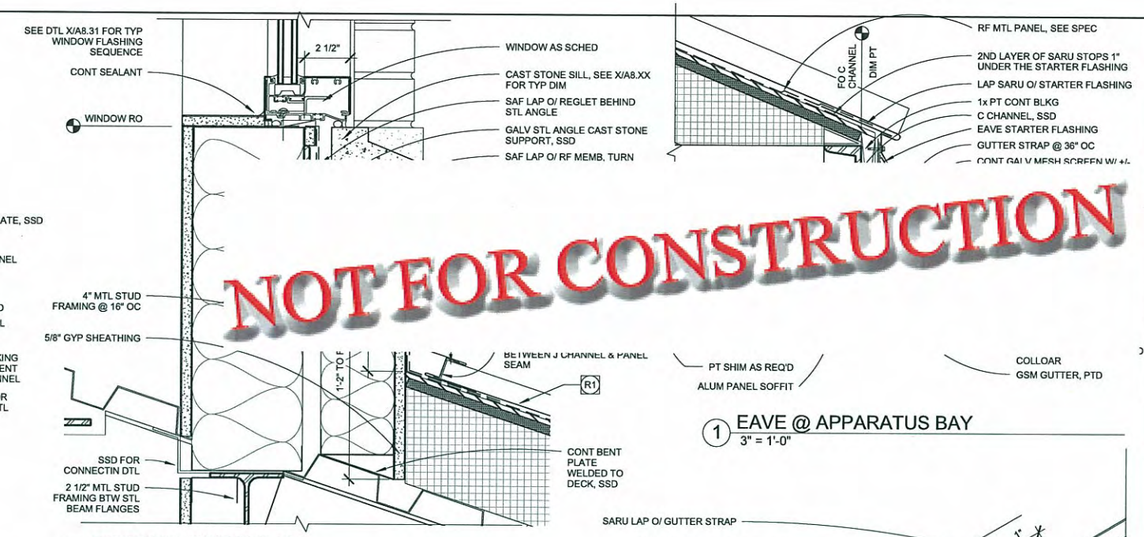


4 ROOF TO WINDOW SILL
3" = 1'-0"




1 EAVE @ APPARATUS BAY
3" = 1'-0"

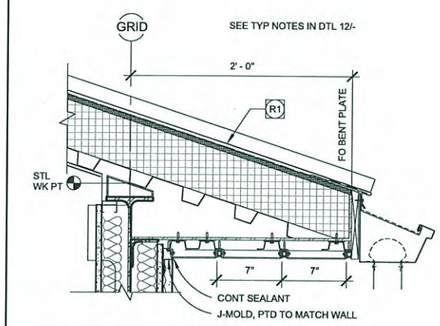


11 EAVE @ CEM PLAS WALL
1 1/2" = 1'-0"

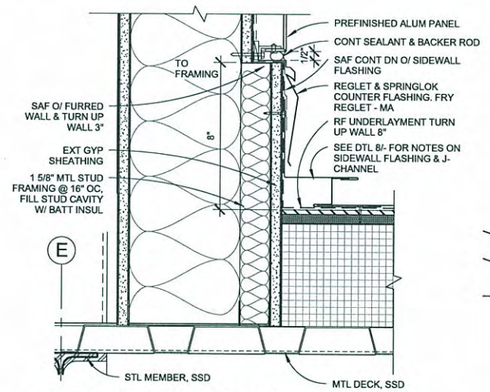


8 ROOF TO SIDEWALL - W3
3" = 1'-0"

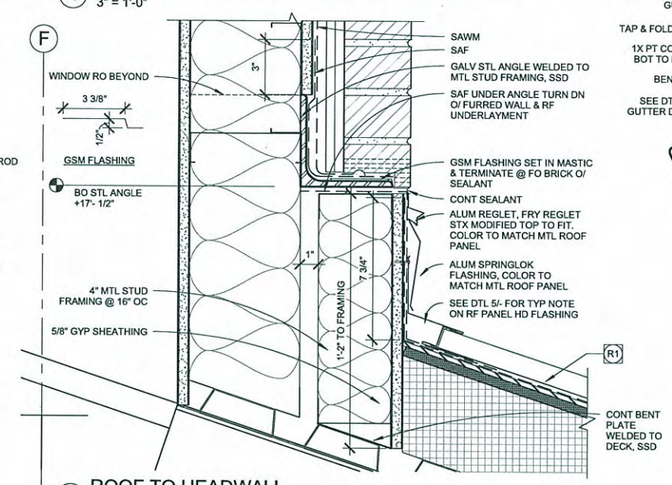


5 ROOF TO HEADWALL
3" = 1'-0"

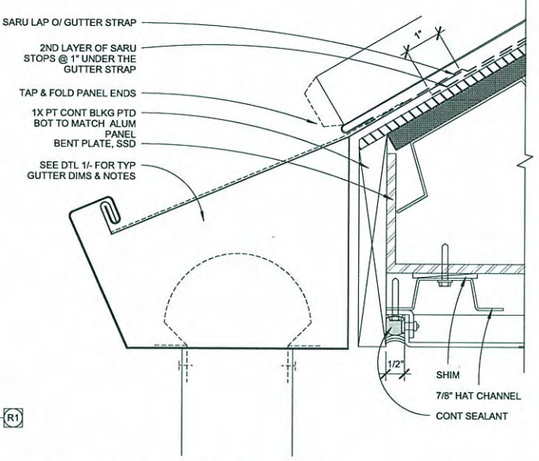


2 GUTTER @ TOWER
6" = 1'-0"

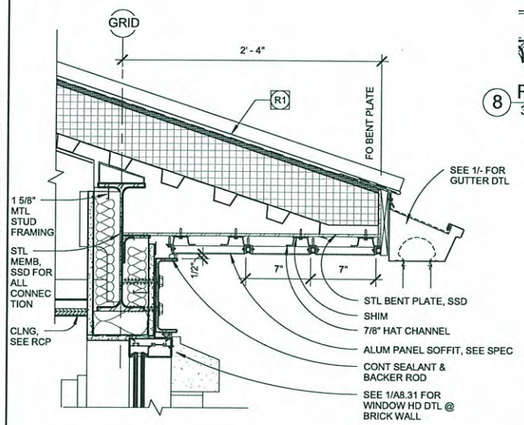


12 EAVE @ BRICK WALL
1 1/2" = 1'-0"

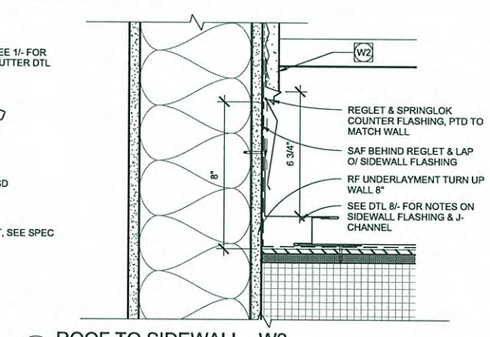


9 ROOF TO SIDEWALL - W2
3" = 1'-0"

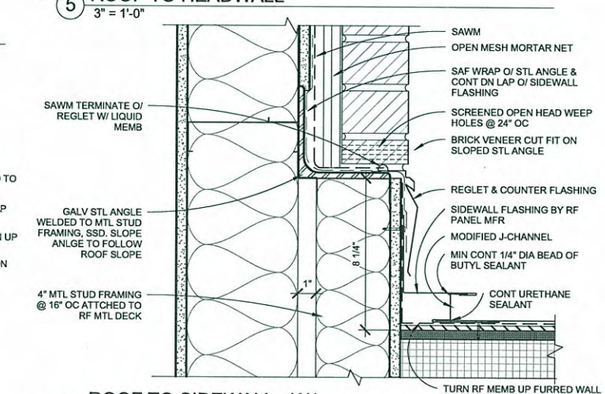


6 ROOF TO SIDEWALL - W1
3" = 1'-0"

NOT FOR CONSTRUCTION

BSA ARCHITECTS
BULL STOCKWELL ALLEN
A California Corporation
501 Folsom Street, Fourth Floor
San Francisco, CA 94105
415-281-4720

MOUNTAIN VIEW FIRE STATION #5
2195 N SHORELINE BLVD
MOUNTAIN VIEW, CA

Date 12 . 23 . 09

PERMIT SET

Sheet Title:
EXTERIOR DETAILS - ROOF

© 2008 BSA Architects
" All drawings and written material appearing herein constitute the original and unpublished work of the architect and the same may not be duplicated, used, or disclosed without the written consent of the architect. "

Drawn By: WC
Checked By: Checker
Job Number: 20808.00
Sheet A8.51

12/22/2009 4:27:50 PM

C:\Local Files\MVFS_LOCAL_AR.rvt

PIN#- 7779-1

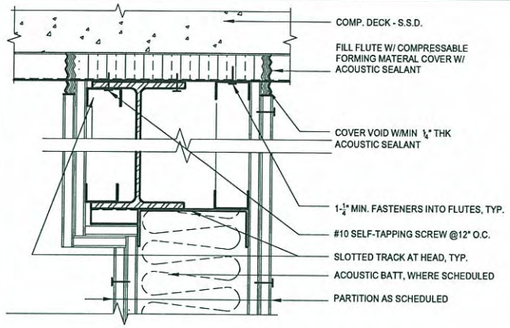


12 ACOUS PTN HD TO BEAM- PERPENDICULAR
3" = 1'-0"

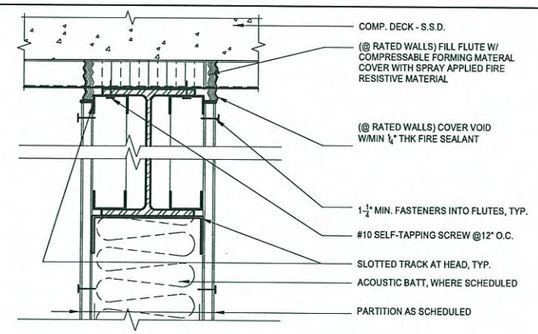


9 PARTITION HD TO BEAM- PERPENDICULAR
3" = 1'-0"

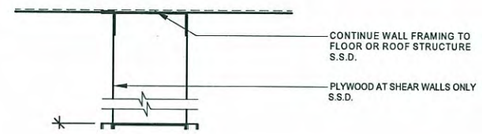


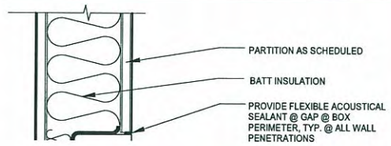


NOT FOR CONSTRUCTION

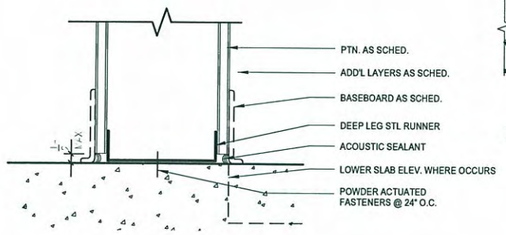


13 PARTITION SILL
3" = 1'-0"

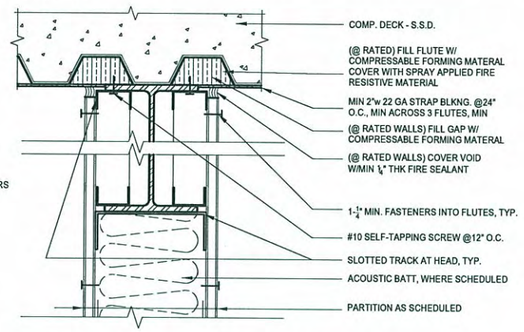


5 PARTITION HD TO ABOVE FINISH CEILING
3" = 1'-0"

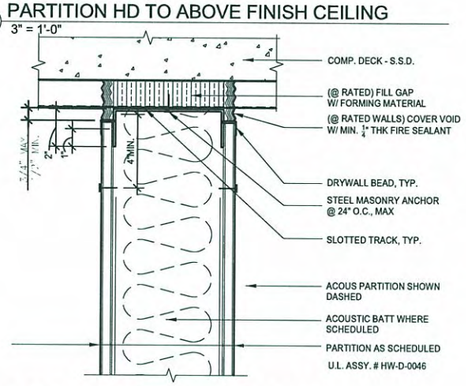


1 RECEPTACLE DETAIL
3" = 1'-0"

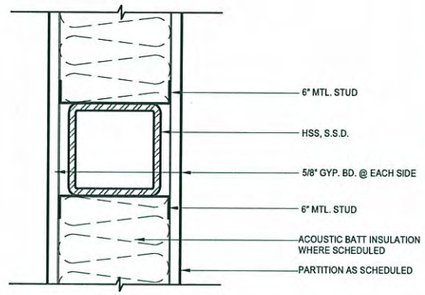


2 PARTITION AT BRACE
3" = 1'-0"

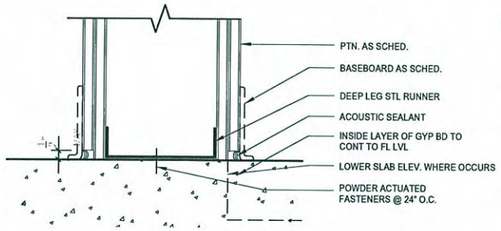


14 ACOUSTIC PARTITION SILL
3" = 1'-0"

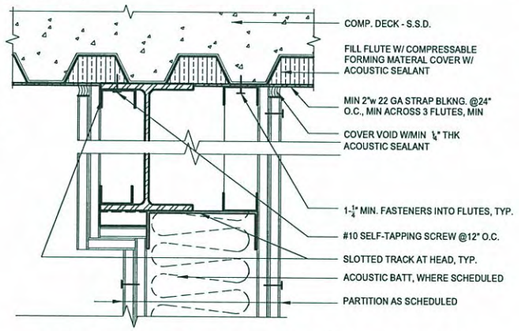


10 PARTITION HD TO BEAM- PARALLEL
3" = 1'-0"

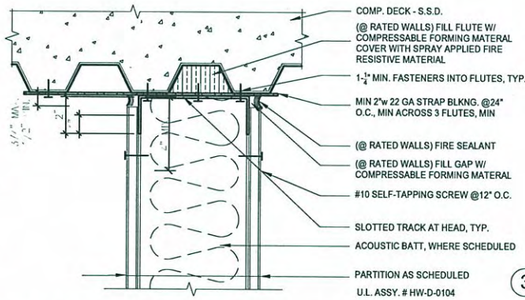


6 PARTITION HD TO STRUCT- PERPENDICULAR
3" = 1'-0"

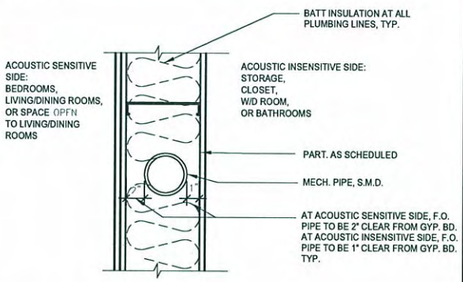


3 WALL PIPE LOCATIONS
1 1/2" = 1'-0"

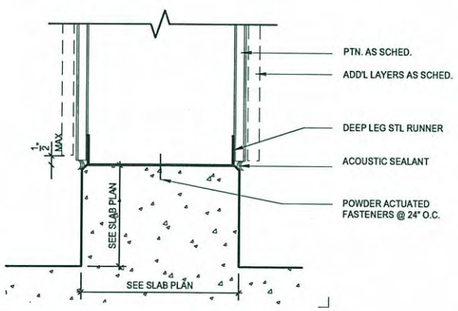


15 PARTITION SILL AT CURB
3" = 1'-0"

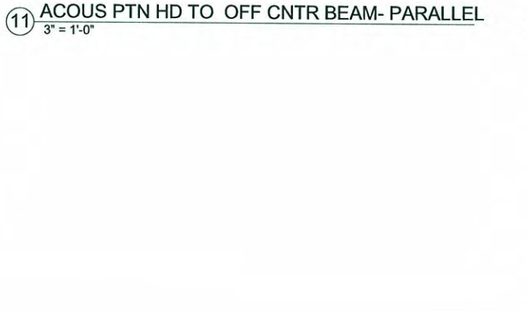


11 ACOUS PTN HD TO OFF CNTR BEAM- PARALLEL
3" = 1'-0"

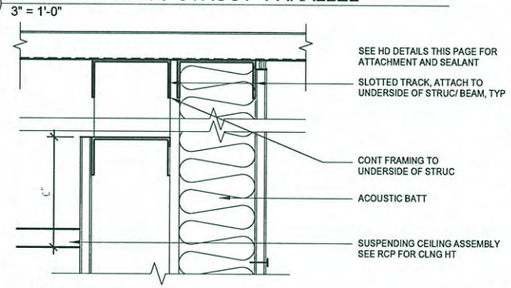


7 PARTITION HD TO STRUCT- PARALLEL
3" = 1'-0"

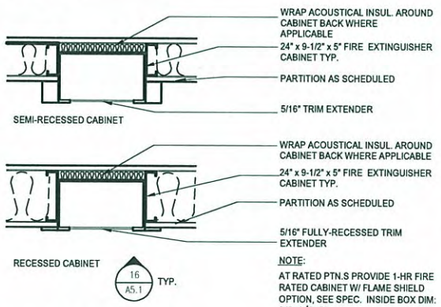


NOTE:
AT RATED PTN.S PROVIDE 1-HR FIRE RATED CABINET W/ FLAME SHIELD OPTION, SEE SPEC. INSIDE BOX DIM: 24"x 9 ½"x 5"

8 PLUMBING PARTITION HD
3" = 1'-0"

4 F.E.C. @ PARTITION
1 1/2" = 1'-0"

BSA ARCHITECTS
BULL STOCKWELL ALLEN
A California Corporation
501 Folsom Street, Fourth Floor
San Francisco, CA 94105
415-281-4720

MOUNTAIN VIEW FIRE STATION #5
2195 N SHORELINE BLVD
MOUNTAIN VIEW, CA

Date 12 . 23 . 09

PERMIT SET

Sheet Title:
PARTITION DETAILS

© 2009 BSA Architects
" All drawings and written material appearing herein constitute the original and unpublished work of the architect and the same may not be duplicated, used, or disclosed without the written consent of the architect. "

Drawn By: AR
Checked By: GJ
Job Number: 20808.00
Sheet A9.03

12/22/2009 4:28:23 PM

C:\Local Files\MVFS_LOCAL_AR.rvt

PIN#- 7779-1 A9.03

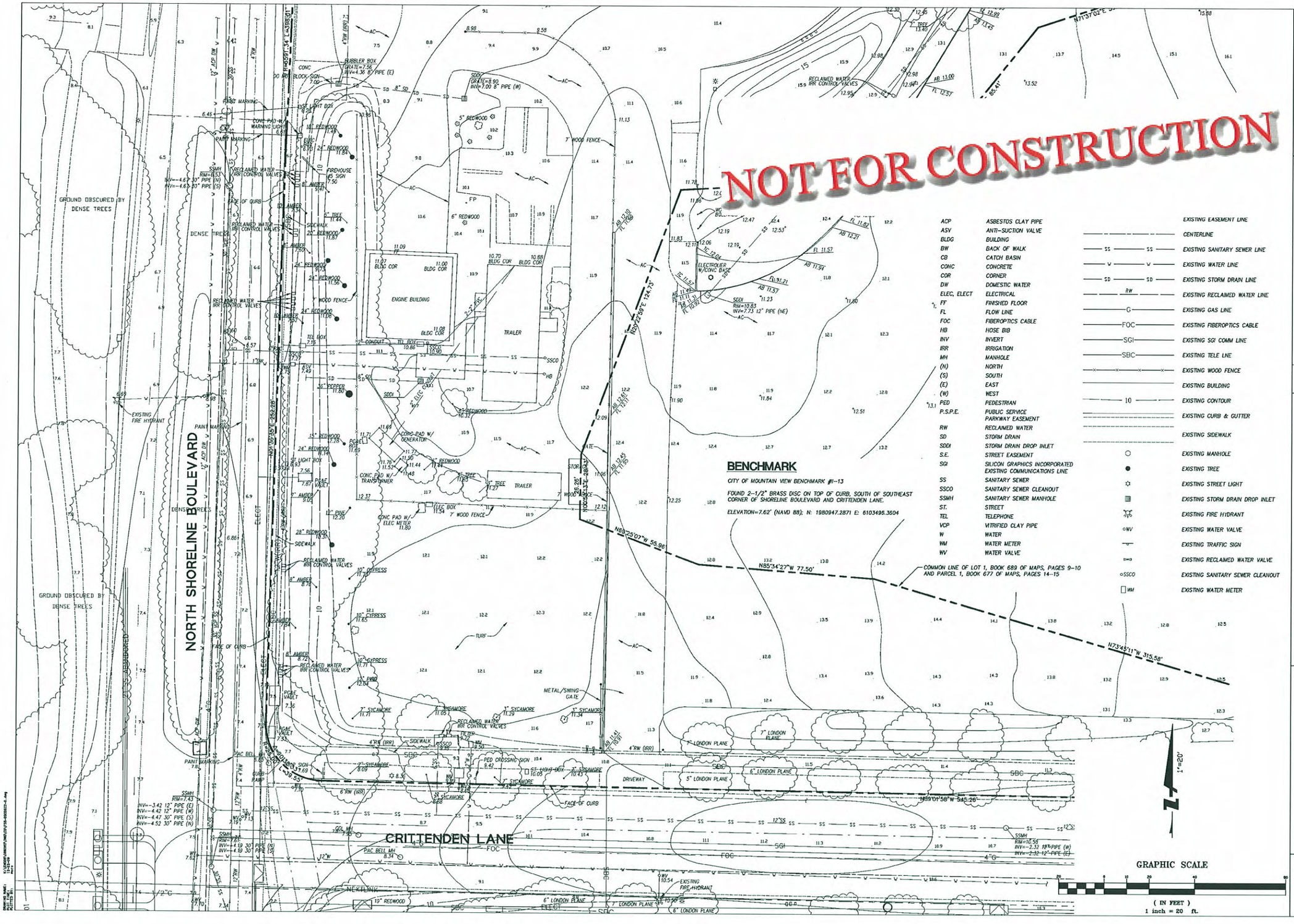


NOT FOR CONSTRUCTION

## BENCHMARK

CITY OF MOUNTAIN VIEW BENCHMARK #1-13

FOUND 2-1/2" BRASS DISC ON TOP OF CURB, SOUTH OF SOUTHEAST CORNER OF SHORELINE BOULEVARD AND CRITTENDEN LANE.

ELEVATION=7.62' (NAVD 88); N: 1980947.2871 E: 6103495.3604

| | | |
|---|---|---|
| ACP | ASBESTOS CLAY PIPE | EXISTING EASEMENT LINE |
| ASV | ANTI-SUCTION VALVE | CENTERLINE |
| BLDG | BUILDING | |
| BW | BACK OF WALK | EXISTING SANITARY SEWER LINE |
| CB | CATCH BASIN | EXISTING WATER LINE |
| CONC | CONCRETE | EXISTING STORM DRAIN LINE |
| COR | CORNER | EXISTING RECLAIMED WATER LINE |
| DW | DOMESTIC WATER | EXISTING GAS LINE |
| ELEC, ELECT | ELECTRICAL | EXISTING FIBEROPTICS CABLE |
| FF | FINISHED FLOOR | EXISTING SGI COMM LINE |
| FL | FLOW LINE | EXISTING TELE LNE |
| FOC | FIBEROPTICS CABLE | EXISTING WOOD FENCE |
| HB | HOSE BIB | EXISTING BUILDING |
| INV | INVERT | EXISTING CONTOUR |
| IRR | IRRIGATION | EXISTING CURB & GUTTER |
| MH | MANHOLE | EXISTING SIDEWALK |
| (N) | NORTH | EXISTING MANHOLE |
| (S) | SOUTH | EXISTING TREE |
| (E) | EAST | EXISTING STREET LIGHT |
| (W) | WEST | EXISTING STORM DRAIN DROP INLET |
| PED | PEDESTRIAN | EXISTING FIRE HYDRANT |
| P.S.P.E. | PUBLIC SERVICE PARKWAY EASEMENT | EXISTING WATER VALVE |
| RW | RECLAIMED WATER | EXISTING TRAFFIC SIGN |
| SD | STORM DRAIN | EXISTING RECLAIMED WATER VALVE |
| SDDI | STORM DRAIN DROP INLET | EXISTING SANITARY SEWER CLEANOUT |
| S.E. | STREET EASEMENT | EXISTING WATER METER |
| SGI | SILICON GRAPHICS INCORPORATED EXISTING COMMUNICATIONS LINE | |
| SS | SANITARY SEWER | |
| SSCO | SANITARY SEWER CLEANOUT | |
| SSMH | SANITARY SEWER MANHOLE | |
| ST. | STREET | |
| TEL | TELEPHONE | |
| VCP | VITRIFIED CLAY PIPE | |
| W | WATER | |
| WM | WATER METER | |
| WV | WATER VALVE | |


BKF
ENGINEERS / SURVEYORS / PLANNERS
1650 TECHNOLOGY DRIVE
SUITE 650
SAN JOSE, CA 95110
408-467-9100
408-467-9199 (FAX)


MOUNTAIN VIEW FIRE STATION #5

2195 N. SHORELINE BLVD
MOUNTAIN VIEW, CA

DATE: 12 . 23 . 09

REVISIONS:

PERMIT SET

SHEET TITLE:
EXISTING CONDITIONS

REGISTERED PROFESSIONAL ENGINEER
MITCHEL W. BURLEY
No. 57874
Exp. 6-30-10
CIVIL
STATE OF CALIFORNIA

DRAWN BY: JPM
CHECKED BY: MWB
JOB NO: 20086062

SHEET
C2.0

PIN#- 7779-1_C2.0

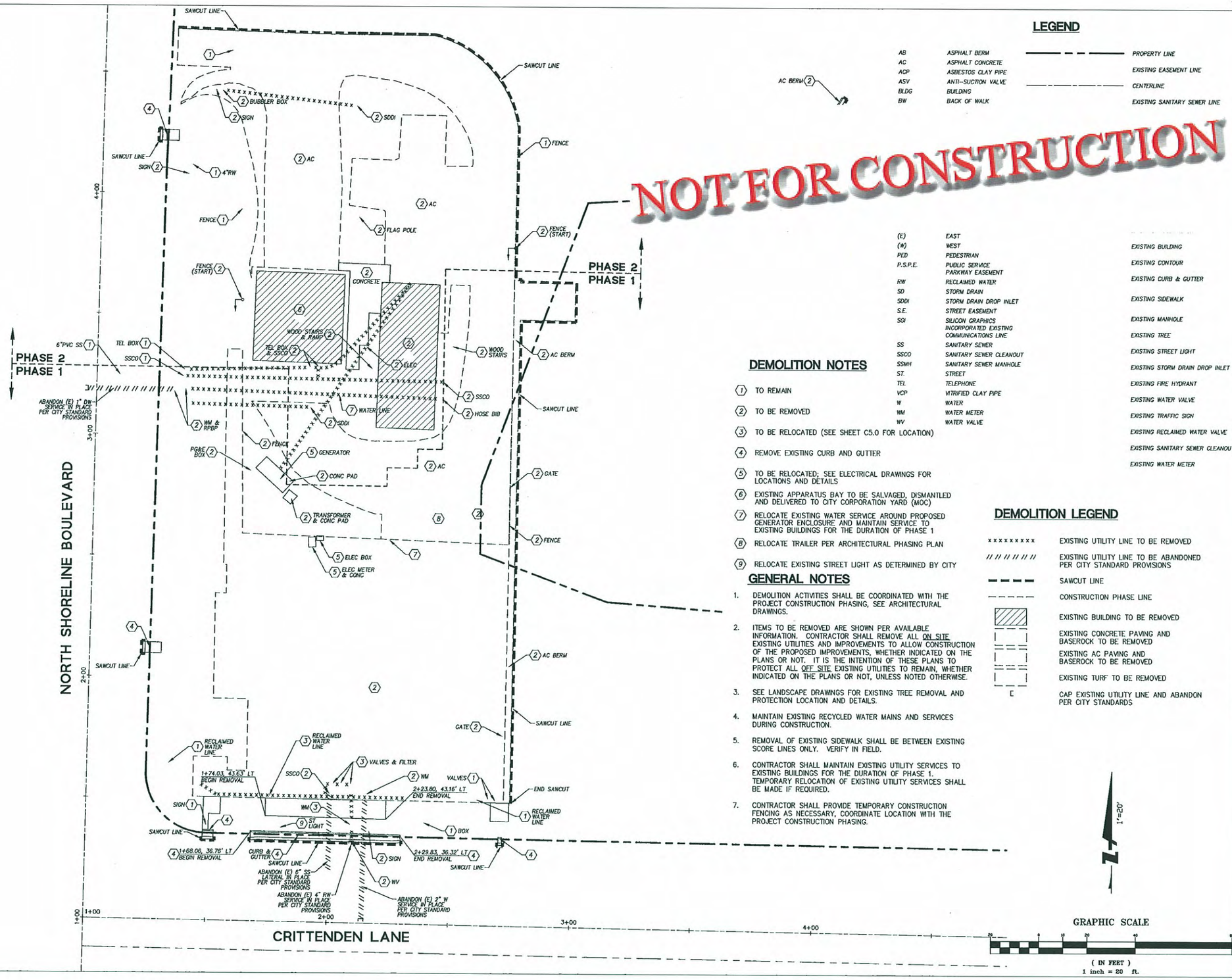


## LEGEND

| | |
|---|---|
| AB | ASPHALT BERM |
| AC | ASPHALT CONCRETE |
| ACP | ASBESTOS CLAY PIPE |
| ASV | ANTI-SUCTION VALVE |
| BLDG | BUILDING |
| BW | BACK OF WALK |
| (E) | EAST |
| (W) | WEST |
| PED | PEDESTRIAN |
| P.S.P.E. | PUBLIC SERVICE PARKWAY EASEMENT |
| RW | RECLAIMED WATER |
| SD | STORM DRAIN |
| SDDI | STORM DRAIN DROP INLET |
| S.E. | STREET EASEMENT |
| SGI | SILICON GRAPHICS INCORPORATED EXISTING COMMUNICATIONS LINE |
| SS | SANITARY SEWER |
| SSCO | SANITARY SEWER CLEANOUT |
| SSMH | SANITARY SEWER MANHOLE |
| ST. | STREET |
| TEL | TELEPHONE |
| VCP | VITRIFIED CLAY PIPE |
| W | WATER |
| WM | WATER METER |
| WV | WATER VALVE |

PROPERTY LINE
EXISTING EASEMENT LINE
CENTERLINE
EXISTING SANITARY SEWER LINE
EXISTING BUILDING
EXISTING CONTOUR
EXISTING CURB & GUTTER
EXISTING SIDEWALK
EXISTING MANHOLE
EXISTING TREE
EXISTING STREET LIGHT
EXISTING STORM DRAIN DROP INLET
EXISTING FIRE HYDRANT
EXISTING WATER VALVE
EXISTING TRAFFIC SIGN
EXISTING RECLAIMED WATER VALVE
EXISTING SANITARY SEWER CLEANOUT
EXISTING WATER METER

## DEMOLITION NOTES

1. TO REMAIN
2. TO BE REMOVED
3. TO BE RELOCATED (SEE SHEET C5.0 FOR LOCATION)
4. REMOVE EXISTING CURB AND GUTTER
5. TO BE RELOCATED; SEE ELECTRICAL DRAWINGS FOR LOCATIONS AND DETAILS
6. EXISTING APPARATUS BAY TO BE SALVAGED, DISMANTLED AND DELIVERED TO CITY CORPORATION YARD (MOC)
7. RELOCATE EXISTING WATER SERVICE AROUND PROPOSED GENERATOR ENCLOSURE AND MAINTAIN SERVICE TO EXISTING BUILDINGS FOR THE DURATION OF PHASE 1
8. RELOCATE TRAILER PER ARCHITECTURAL PHASING PLAN
9. RELOCATE EXISTING STREET LIGHT AS DETERMINED BY CITY

## GENERAL NOTES

1. DEMOLITION ACTIVITIES SHALL BE COORDINATED WITH THE PROJECT CONSTRUCTION PHASING, SEE ARCHITECTURAL DRAWINGS.
2. ITEMS TO BE REMOVED ARE SHOWN PER AVAILABLE INFORMATION. CONTRACTOR SHALL REMOVE ALL ON SITE EXISTING UTILITIES AND IMPROVEMENTS TO ALLOW CONSTRUCTION OF THE PROPOSED IMPROVEMENTS, WHETHER INDICATED ON THE PLANS OR NOT. IT IS THE INTENTION OF THESE PLANS TO PROTECT ALL OFF SITE EXISTING UTILITIES TO REMAIN, WHETHER INDICATED ON THE PLANS OR NOT, UNLESS NOTED OTHERWISE.
3. SEE LANDSCAPE DRAWINGS FOR EXISTING TREE REMOVAL AND PROTECTION LOCATION AND DETAILS.
4. MAINTAIN EXISTING RECYCLED WATER MAINS AND SERVICES DURING CONSTRUCTION.
5. REMOVAL OF EXISTING SIDEWALK SHALL BE BETWEEN EXISTING SCORE LINES ONLY. VERIFY IN FIELD.
6. CONTRACTOR SHALL MAINTAIN EXISTING UTILITY SERVICES TO EXISTING BUILDINGS FOR THE DURATION OF PHASE 1. TEMPORARY RELOCATION OF EXISTING UTILITY SERVICES SHALL BE MADE IF REQUIRED.
7. CONTRACTOR SHALL PROVIDE TEMPORARY CONSTRUCTION FENCING AS NECESSARY, COORDINATE LOCATION WITH THE PROJECT CONSTRUCTION PHASING.

## DEMOLITION LEGEND

| | |
|---|---|
| xxxxxxxxx | EXISTING UTILITY LINE TO BE REMOVED |
| //////////// | EXISTING UTILITY LINE TO BE ABANDONED PER CITY STANDARD PROVISIONS |
| | SAWCUT LINE |
| | CONSTRUCTION PHASE LINE |
| | EXISTING BUILDING TO BE REMOVED |
| | EXISTING CONCRETE PAVING AND BASEROCK TO BE REMOVED |
| | EXISTING AC PAVING AND BASEROCK TO BE REMOVED |
| | EXISTING TURF TO BE REMOVED |
| E | CAP EXISTING UTILITY LINE AND ABANDON PER CITY STANDARDS |

1"=20'

GRAPHIC SCALE

( IN FEET )
1 inch = 20 ft.


BKF
ENGINEERS / SURVEYORS / PLANNERS
1650 TECHNOLOGY DRIVE
SUITE 650
SAN JOSE, CA 95110
408-467-9100
408-467-9199 (FAX)


MOUNTAIN VIEW FIRE STATION #5
2195 N. SHORELINE BLVD
MOUNTAIN VIEW, CA

DATE: 12 . 23 . 09

REVISIONS:

PERMIT SET

SHEET TITLE:
DEMOLITION PLAN

REGISTERED PROFESSIONAL ENGINEER
MITCHEL W. BURLEY
No. 57874
Exp. 6-30-10
CIVIL
STATE OF CALIFORNIA

DRAWN BY: JPM
CHECKED BY: MWB
JOB NO: 20086062
SHEET C3.0

PIN#- 7779-1_C3.0

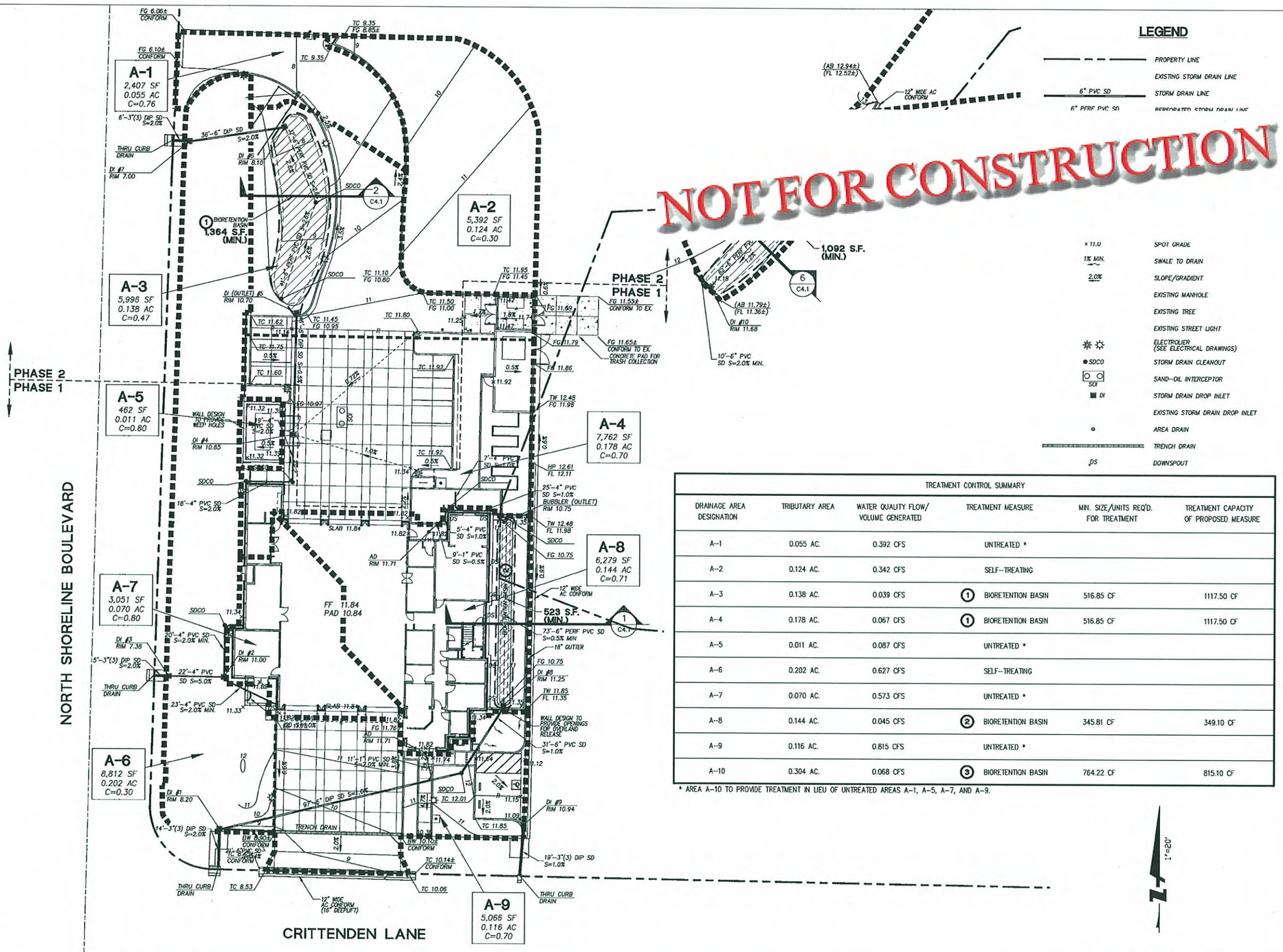


## LEGEND

| | |
|---|---|
| | PROPERTY LINE |
| | EXISTING STORM DRAIN LINE |
| 6" PVC SD | STORM DRAIN LINE |
| 6" PERF PVC SD | PERFORATED STORM DRAIN LINE |
| × 11.0 | SPOT GRADE |
| 1% MIN. | SWALE TO DRAIN |
| 2.0% | SLOPE/GRADIENT |
| | EXISTING MANHOLE |
| | EXISTING TREE |
| | EXISTING STREET LIGHT |
| | ELECTROLIER (SEE ELECTRICAL DRAWINGS) |
| SDCO | STORM DRAIN CLEANOUT |
| SOI | SAND–OIL INTERCEPTOR |
| DI | STORM DRAIN DROP INLET |
| | EXISTING STORM DRAIN DROP INLET |
| | AREA DRAIN |
| | TRENCH DRAIN |
| DS | DOWNSPOUT |

TREATMENT CONTROL SUMMARY

| DRAINAGE AREA DESIGNATION | TRIBUTARY AREA | WATER QUALITY FLOW/ VOLUME GENERATED | TREATMENT MEASURE | MIN. SIZE/UNITS REQ'D. FOR TREATMENT | TREATMENT CAPACITY OF PROPOSED MEASURE |
|---|---|---|---|---|---|
| A–1 | 0.055 AC. | 0.392 CFS | UNTREATED * | | |
| A–2 | 0.124 AC. | 0.342 CFS | SELF–TREATING | | |
| A–3 | 0.138 AC. | 0.039 CFS | 1 BIORETENTION BASIN | 516.85 CF | 1117.50 CF |
| A–4 | 0.178 AC. | 0.067 CFS | 1 BIORETENTION BASIN | 516.85 CF | 1117.50 CF |
| A–5 | 0.011 AC. | 0.087 CFS | UNTREATED * | | |
| A–6 | 0.202 AC. | 0.627 CFS | SELF–TREATING | | |
| A–7 | 0.070 AC. | 0.573 CFS | UNTREATED * | | |
| A–8 | 0.144 AC. | 0.045 CFS | 2 BIORETENTION BASIN | 345.81 CF | 349.10 CF |
| A–9 | 0.116 AC. | 0.815 CFS | UNTREATED * | | |
| A–10 | 0.304 AC. | 0.068 CFS | 3 BIORETENTION BASIN | 764.22 CF | 815.10 CF |

* AREA A–10 TO PROVIDE TREATMENT IN LIEU OF UNTREATED AREAS A–1, A–5, A–7, AND A–9.


BKF
ENGINEERS / SURVEYORS / PLANNERS
1650 TECHNOLOGY DRIVE
SUITE 650
SAN JOSE, CA 95110
408–467–9100
408–467–9199 (FAX)


MOUNTAIN VIEW FIRE STATION #5

2195 N. SHORELINE BLVD
MOUNTAIN VIEW, CA

DATE: 12 . 23 . 09

REVISIONS:

PERMIT SET

SHEET TITLE:

# STORMWATER MANAGEMENT PLAN

REGISTERED PROFESSIONAL ENGINEER
MITCHEL W. BURLEY
No. 57874
Exp. 6–30–10
CIVIL
STATE OF CALIFORNIA

DRAWN BY: JPM
CHECKED BY: MWB
JOB NO: 20086062

SHEET
C6.0

PIN#- 7779-1_C6.0

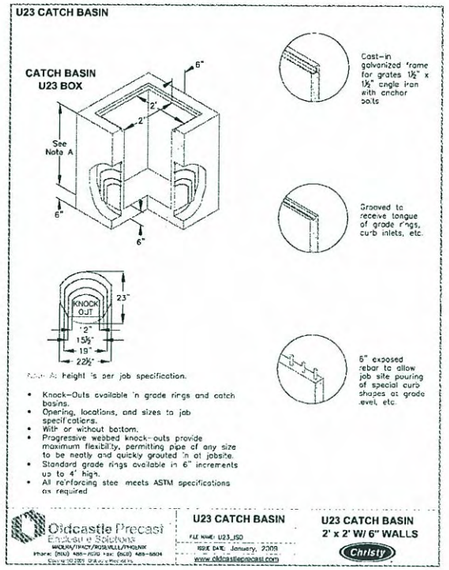


## DRAINAGE INLET

1

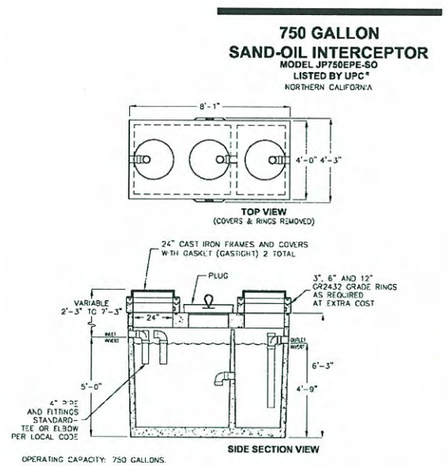


## SAND-OIL INTERCEPTOR

2

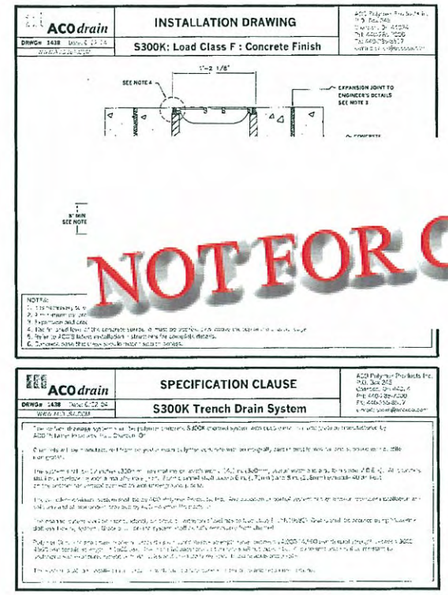


## TRENCH DRAIN

3

NOT FOR CONSTRUCTION

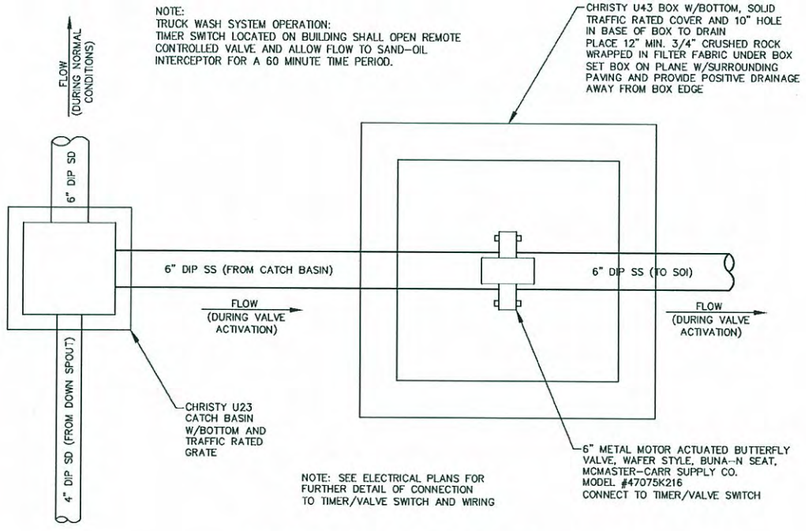


## REMOTE CONTROLLED VALVE BOX

N.T.S.

4

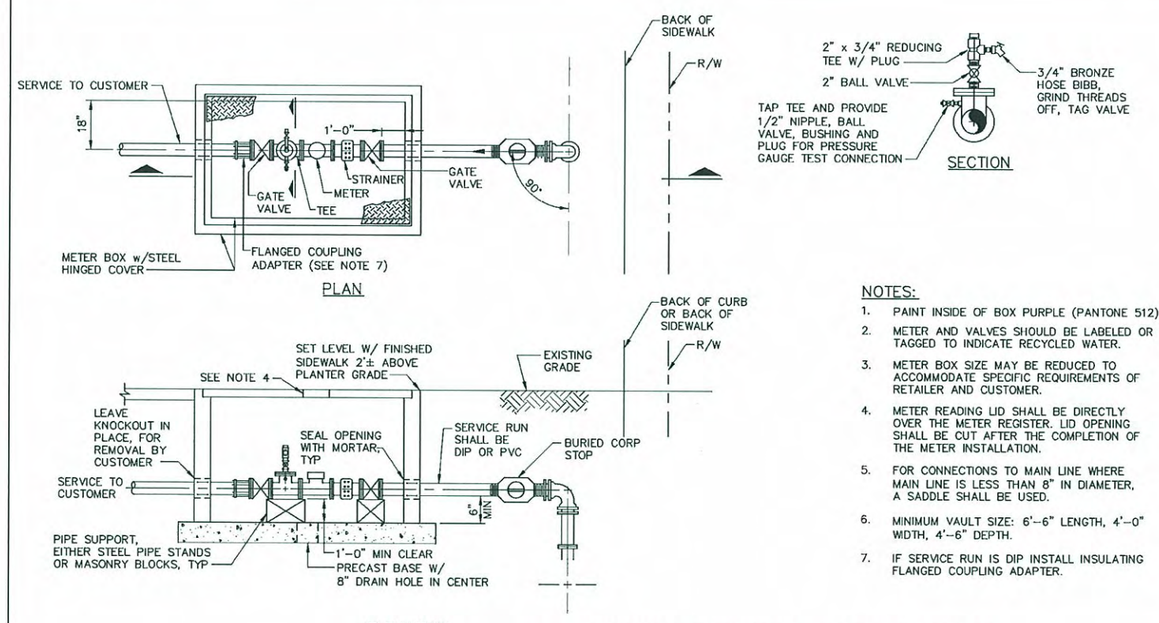


NOTES:

1. PAINT INSIDE OF BOX PURPLE (PANTONE 512).
2. METER AND VALVES SHOULD BE LABELED OR TAGGED TO INDICATE RECYCLED WATER.
3. METER BOX SIZE MAY BE REDUCED TO ACCOMMODATE SPECIFIC REQUIREMENTS OF RETAILER AND CUSTOMER.
4. METER READING LID SHALL BE DIRECTLY OVER THE METER REGISTER. LID OPENING SHALL BE CUT AFTER THE COMPLETION OF THE METER INSTALLATION.
5. FOR CONNECTIONS TO MAIN LINE WHERE MAIN LINE IS LESS THAN 8" IN DIAMETER, A SADDLE SHALL BE USED.
6. MINIMUM VAULT SIZE: 6'-6" LENGTH, 4'-0" WIDTH, 4'-6" DEPTH.
7. IF SERVICE RUN IS DIP INSTALL INSULATING FLANGED COUPLING ADAPTER.

5

## BURIED SERVICE CONNECTION 2-INCH AND SMALLER

N.T.S.


BKF
ENGINEERS / SURVEYORS / PLANNERS
1650 TECHNOLOGY DRIVE
SUITE 650
SAN JOSE, CA 95110
408-467-9100
408-467-9199 (FAX)


MOUNTAIN VIEW FIRE STATION #5

2195 N. SHORELINE BLVD
MOUNTAIN VIEW, CA

DATE: 12 . 23 . 09

REVISIONS:

PERMIT SET

SHEET TITLE:

CONSTRUCTION DETAILS

REGISTERED PROFESSIONAL ENGINEER
MITCHEL W. BURLEY
No. 57874
Exp. 6-30-10
CIVIL
STATE OF CALIFORNIA

DRAWN BY: JPM
CHECKED BY: MWB
JOB NO: 20086062

SHEET C7.1

PIN#- 7779-1_C7.1

MOUNTAIN_VIEW_FIRE_STATION_#5-208067

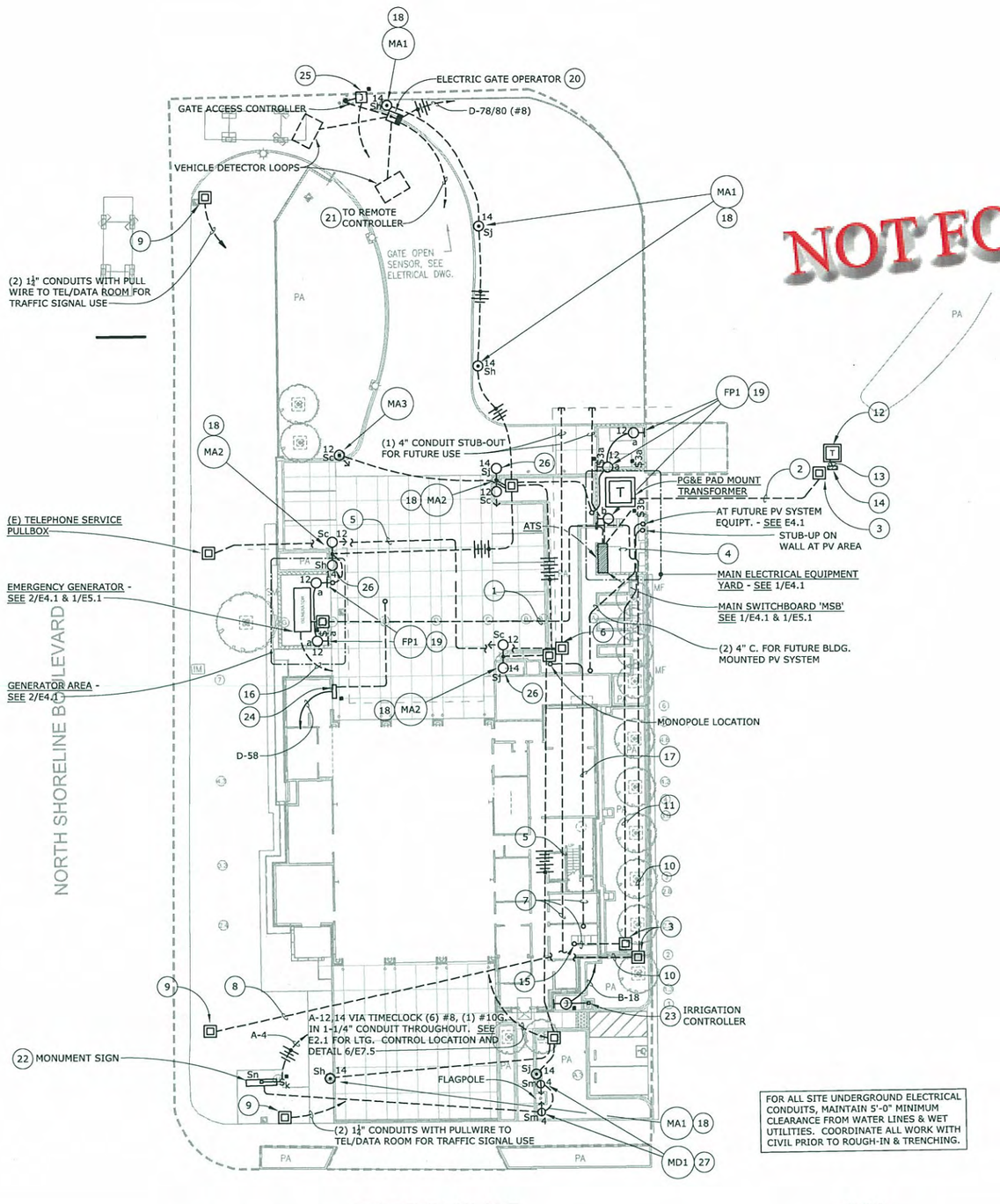


FOR ALL SITE UNDERGROUND ELECTRICAL CONDUITS, MAINTAIN 5'-0" MINIMUM CLEARANCE FROM WATER LINES & WET UTILITIES. COORDINATE ALL WORK WITH CIVIL PRIOR TO ROUGH-IN & TRENCHING.

## SITE PLAN - ELECTRICAL

SCALE: 1" = 20'-0"
FILE: ... L-BASE ETAL (12.16.09)

1 / E1.1

REF. NORTH

## NUMBERED SHEET NOTES

1. PROVIDE AND INSTALL FEEDERS AND CONTROL WIRING FROM GENERATOR TO THE AUTOMATIC SWITCH IN ADDITION TO THE GENERATOR FEEDERS AND CONTROLS PROVIDE AND INSTALL TWO SPARE 1¼" CONDUITS WITH PULLWIRE BETWEEN THE GENERATOR AND THE ATS.
2. PROVIDE AND INSTALL (2) 4" CONDUITS FOR PG&E PRIMARY SERVICE. COORDINATE WITH PG&E
8. PROVIDE AND INSTALL TWO (2) 2" CONDUITS TO SHORELINE BLVD. FOR FUTURE CABLE TV AND CITY FIBRE OPTIC CABLE USE.
9. PROVIDE AND INSTALL PULLBOX, CHRISTY N36 OR EQUAL WITH FULLY RATED TRAFFIC COVER. COORDINATE PULLBOX LOCATION PRIOR TO ROUGH IN.
10. PROVIDE AND INSTALL FEEDERS TO FIRE STATION DISTRIBUTION BOARD - SEE 1/E5.1.
11. PROVIDE AND INSTALL (2) 2½" SPARE CONDUITS TO FIRE STATION FOR FUTURE PV SYSTEM USE.
12. PG&E TRANSFORMER FOR NEW SERVICE TO THE LIVE NATION PARKING LOT SERVICE PEDESTAL - SEE 1/E1.2.
13. PG&E SECONDARY SERVICE TO LIVE NATION SERVICE PEDESTAL - SEE 1/E1.2.
14. RELOCATED LIVE NATION SERVICE PEDESTAL, SEE 1/E1.2.
15. STUB-UP IN ELECTRICAL ROOM.
16. PROVIDE AND INSTALL 1 1/4" CONDUIT WITH PULL WIRE FROM THE GENERATOR TO TEL/DATA ROOM FOR SCADA MONITORING OF THE GENERATOR.
17. PROVIDE AND INSTALL THE FOLLOWING TO THE MONOPOLE LOCATION:
    - -(3) 4" CONDUITS WITH LONG RADIUS BENDS.
    - -(2) 2" CONDUITS WITH LONG RADIUS BENDS.
    - -(1) #4/0 GRD IN 1" C. FOR TOWER GROUNDING.
    - -(1) 2" C. FOR HAM RADIO
    - -(1) 2" C. FOR SCADA SYSTEM
18. SEE DETAIL 3/E7.5.
19. WALL MOUNTED AS HIGH AS POSSIBLE ON ENCLOSURE WALL.
20. ELECTRIC GATE. PROVIDE AND INSTALL ALL CONNECTIONS FOR GATE. CONNECT COMPLETE. VERIFY EXACT REQUIREMENTS WITH APPROVED VENDOR SHOP DRAWINGS PRIOR TO ROUGH-IN.
21. PROVIDE AND INSTALL CONTROL WIRING IN 3/4" CONDUIT TO REMOTE GATE CONTROLLER IN DINING 115. SEE E3.1. CONNECT COMPLETE. VERIFY EXACT REQUIREMENTS WITH APPROVED VENDOR SHOP DRAWINGS PRIOR TO ROUGH-IN.
22. PROVIDE AND INSTALL WEATHERPROOF KEYED SWITCH FOR MONUMENT SIGN. CONNECT COMPLETE. ROUTE BRANCH CIRCUIT HOMERUN VIA LIGHTING CONTROL PANEL. VERIFY EXACT REQUIREMENTS WITH APPROVED VENDOR SHOP DRAWINGS PRIOR TO ROUGH-IN.
23. PROVIDE AND INSTALL 120V CIRCUIT FOR IRRIGATION CONTROLLER. CONNECT COMPLETE. VERIFY LOCATION AND REQUIREMENTS WITH LANDSCAPE ARCHITECT PRIOR TO ROUGH-IN.
24. FOR REMOTE CONTROLLED VALVE PROVIDE AND INSTALL TIMESWITCH (TORK #C560M, OR EQUAL) WITH METAL WALL PLATE, WALLBOX, AND NEMA 38 ENCLOSURE. CONNECT COMPLETE. VERIFY LOCATION AND REQUIREMENTS WITH CIVIL PRIOR TO ROUGH-IN.
25. PROVIDE AND INSTALL WEATHERPROOF TELE/DATA OUTLET AND JUNCTION BOX WITH TELE/DATA CABLE IN 1" CONDUIT TO TELE/DATA ROOM. VERIFY LOCATION AND REQUIREMENTS WITH ARCHITECT PRIOR TO ROUGH-IN.
26. 100W, TYPE V HEAD.
27. SEE DETAIL 1/E7.5.

NOT FOR CONSTRUCTION

O'MAHONY & MYER
ELECTRICAL ENGINEERING and LIGHTING DESIGN
4340 REDWOOD HWY., SUITE 245
SAN RAFAEL, CALIFORNIA 94903
(415) 492-0420/FAX (415) 479-9662
www.ommconsulting.com

REGISTERED PROFESSIONAL ENGINEER
PIETER J. COLENBRANDER
No.14738
Exp. 6/11
ELECTRICAL
STATE OF CALIFORNIA

MOUNTAIN VIEW FIRE STATION #5

2195 N. SHORELINE BLVD
MOUNTAIN VIEW, CA

DATE: 12 . 23 . 09

REVISIONS:

PERMIT SET

SHEET TITLE:
SITE PLAN – ELECTRICAL

DRAWN BY: TV/LN/ME
CHECKED BY: PJC
JOB NO: 20808.00

SHEET E1.1

PIN#- 7779-1_E1.1

P:\2008\MOUNTAIN_VIEW_FIRE_STATION_#5-208067\CAD_E1.1_MVFS5.dwg, 12/22/2009 12:54:03 PM, lnichols

MOUNTAIN_VIEW_FIRE_STATION_#5-208067

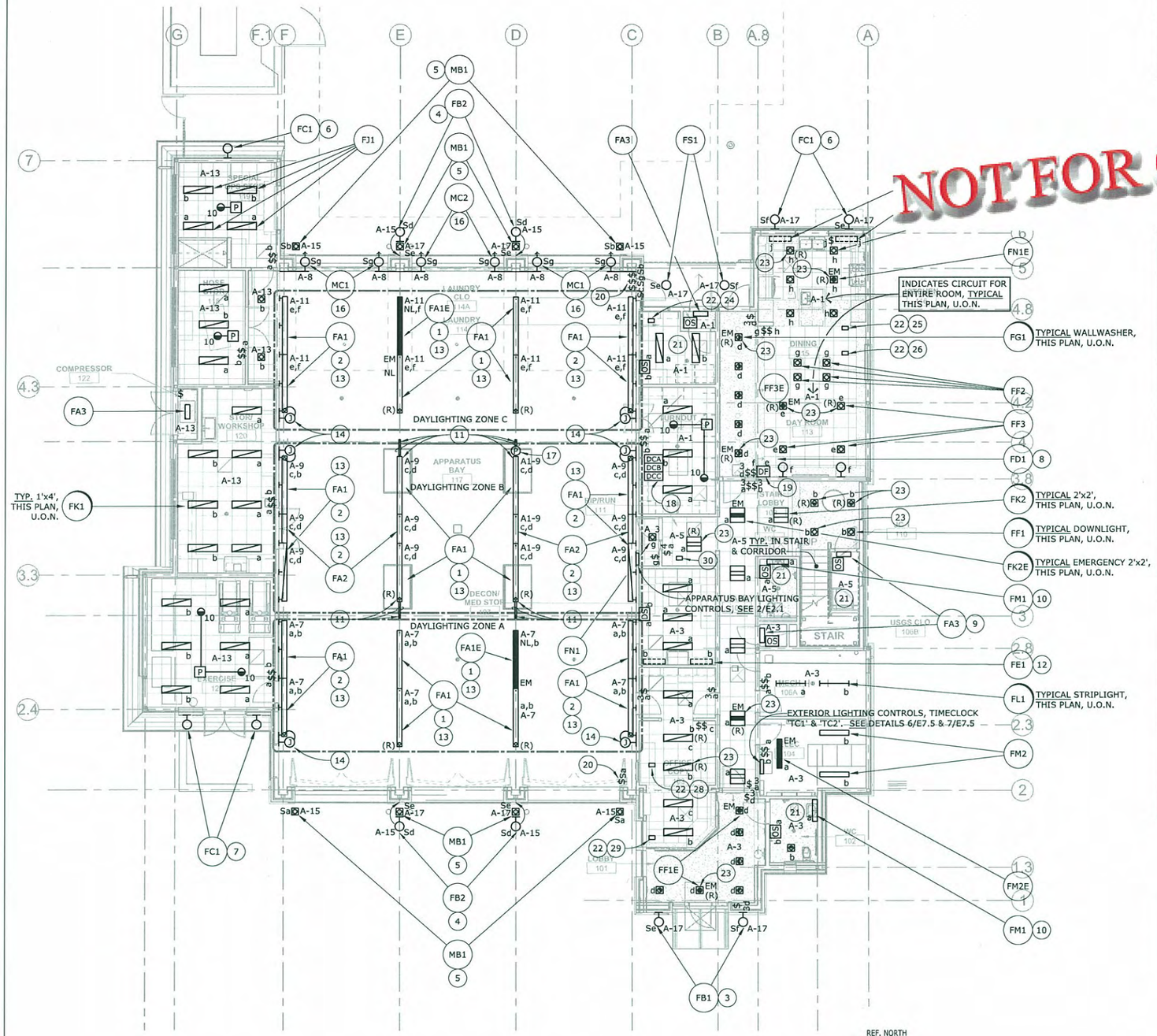


## FIRST FLOOR PLAN - LIGHTING

SCALE: 1/8" = 1'-0"
FILE: ... 091216_MVFS_LVL1 (12.16.09) + 091015_MVFS_RCP_LVL1 (12.11.09) + 091015_MVFS_ROOF (12.11.09)

1 E2.1

REF. NORTH

## NUMBERED SHEET NOTES

1. CABLE SUSPENDED AT 15'-9" A.F.F. TO BOTTOM OF LUMINAIRE; SEE 3/E7.4. COORDINATE INSTALLATION WITH RADIANT HEAT ASSEMBLY AND VEHICLE EXHAUST SYSTEM INSTALLERS; 15.
2. WALL MOUNTED AT 15'-9" A.F.F. TO BOTTOM OF LUMINAIRE: - SEE 3/E7.4. COORDINATE
9. MOUNTED ON WALL ABOVE DOOR HEADER, UP 6" TO BOTTOM OF FIXTURE.
10. WALL MOUNTED ABOVE MIRROR; 15.
11. EXTEND 'UNISTRUT' CHANNEL FIXTURE SUPPORTS BEYOND FIXTURE ENDS AT THESE LOCATIONS TO FACILITATE SUSPENSION CABLE INSTALLATION BEYOND SKYLIGHT OPENINGS IN ROOF ABOVE, AS SHOWN. SEE _____ / E7._____ .
12. UNDERCABINET LIGHT. SEE DETAIL 2/E7.5; 15.
13. THESE FIXTURES SHALL BE CONTROLLED VIA THE DAYLIGHTING PHOTOCELL. SEE 1/E5.8
14. FLUSH-WALL J-BOX W/DECORATIVE COVER, FOR CONNECTION TO BRACKET CANTILEVERED FAI FIXTURES; SEE 3/E7.4.
15. FOR EXACT FIXTURE LOCATIONS, REFER TO ARCHITECTURAL DRAWINGS, INCLUDING REFLECTED CEILING PLANS, ELEVATIONS & DETAILS; VERIFY PRIOR TO ROUGH-IN.
16. EXTERIOR FIRE TRUCK WASH PAD FLOODLIGHTS (MC-SERIES) TO BE MOUNTED ON CUSTOM PLATE STEEL BRACKET(S) WELDED TO STRUCTURAL STEEL COLUMN; BOTTOM OF MOUNTING BRACKET UP 17'-8". FLOODLIGHTS AIMED TO DIRECT MAIN BEAM THROUGH UPPER WINDOWS. SEE 4/E7.3.
17. MOUNT PHOTOSENSOR ON BOTTOM OF UNISTRUT. SEE WIRING DIAGRAM 1/E5.8.
18. DAYLIGHTING CONTROLLERS, ONE FOR EACH DAYLIGHTING ZONE FOR A TOTAL OF 3. MOUNT IN ACCESSIBLE CEILING AND LABEL 'DAYLIGHT CONTROLLER' WITH RESPECTIVE ZONE. DIAGRAM 1/E5.8.
19. FLUORESCENT PRESET DIMMER SWITCH, LUTRON #NTF-103P. GANG TOGETHER WITH OTHER SWITCHES UNDER COMMON FACEPLATE.
20. LABEL SWITCH(ES) "EXTERIOR WORK LIGHTS".
21. SEE SHEETS E3.5 & E3.6 FOR EXHAUST FANS CONNECTED AND CONTROLLED BY LIGHTING CIRCUITS.
22. INSTALL FSAS (FIRE STATION ALERTING SYSTEM) CONTROL RELAY ABOVE ACCESSIBLE CEILING, SEE 1/E5.6. COORDINATE LOCATION WITH OWNERS FSAS VENDOR AND ARCHITECT.
23. SEE 1/E5.6 FOR FSAS CONTROL OF LIGHT FIXTURE.
24. FSAS CONTROL RELAY #R10. SEE 1/E5.6 & 1/E5.7.
25. FSAS CONTROL RELAY #R8. SEE 1/E5.6 & 1/E5.7.
26. FSAS CONTROL RELAY #R9. SEE 1/E5.6 & 1/E5.7.
27. FSAS CONTROL RELAY #R7. SEE 1/E5.6 & 1/E5.7.
28. FSAS CONTROL RELAY #R11. SEE 1/E5.6 & 1/E5.7.
29. FSAS CONTROL RELAY #R12. SEE 1/E5.6 & 1/E5.7.
30. INSTALL FSAS CONTROL RELAYS #R13, #R14, AND #R15 FOR APPARATUS BAY LIGHTING CONTROL ABOVE ACCESSIBLE CEILING, SEE 1/E5.8. COORDINATE LOCATION WITH FSAS VENDOR AND ARCHITECT.

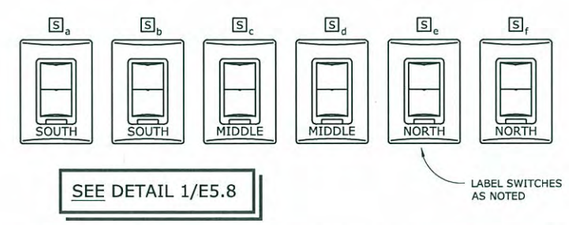


SEE DETAIL 1/E5.8

## APPARATUS BAY LIGHTING CONTROLS

SCALE: NONE

2 E2.2

O'MAHONY & MYER
ELECTRICAL ENGINEERING and LIGHTING DESIGN
4340 REDWOOD HWY, SUITE 245
SAN RAFAEL, CALIFORNIA 94903
(415) 492-0420/FAX (415) 479-9662
www.ommconsulting.com

REGISTERED PROFESSIONAL ENGINEER
PIETER J. COLENBRANDER
No.14738
Exp. 6/11
ELECTRICAL
STATE OF CALIFORNIA

NOT FOR CONSTRUCTION

MOUNTAIN VIEW FIRE STATION #5

2195 N. SHORELINE BLVD
MOUNTAIN VIEW, CA

DATE: 12 . 23 . 09

REVISIONS:

PERMIT SET

SHEET TITLE:
FIRST FLOOR PLAN – LIGHTING

DRAWN BY: LN/TV/ME
CHECKED BY: PJC
JOB NO: 20808.00

SHEET E2.1

PIN#- 7779-1_E2.1

P:\2008\MOUNTAIN_VIEW_FIRE_STATION_#5-208067\CAD_E2.1_MVFS5.dwg, 12/22/2009 1:29:23 PM, hichols

MOUNTAIN_VIEW_FIRE_STATION_#5-208067

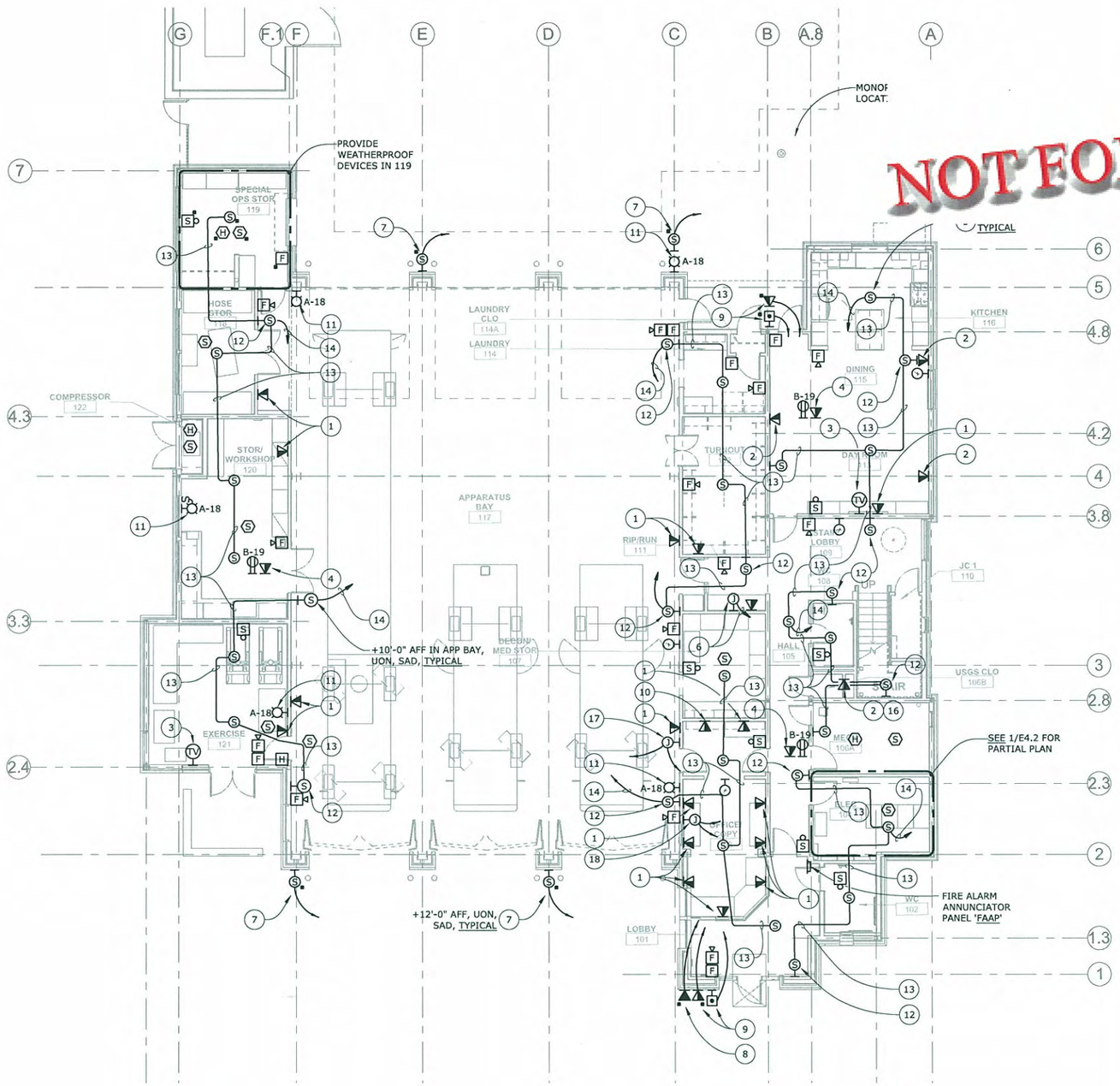


## FIRST FLOOR PLAN - SIGNAL & COMMUNICATIONS

SCALE: 1/8" = 1'-0"
FILE: ... 091216_MVFS_LVL1 (12.16.09)

1 / E3.3

## NUMBERED SHEET NOTES

1. TELEPHONE DATA OUTLET. MOUNT ADJACENT TO DOUBLE DUPLEX RECEPTACLE. SEE 1/E3.1 AND 1/E7.1
2. TELEPHONE DATA OUTLET. MOUNT ADJACENT TO DUPLEX RECEPTACLE. SEE 1/E3.1 AND 2/E7.1.

TELEPHONE/DATA ROOM. EXTERIOR SPEAKERS SHALL BE CONTROLLED VIA VENDOR SUPPLIED TIME-OF-DAY CLOCK-TIMER. VERIFY EXACT LOCATION WITH ARCHITECT AND EXACT REQUIREMENTS WITH EQUIPMENT VENDOR PRIOR TO ROUGH-IN. MOUNT AT +12'-0" AFF, U.O.N., SAD.

8. FOR EMERGENCY 911 TELEPHONE WITH ADA COMPLIANT WEATHERPROOF ENCLOSURE & 3/4" C. HOMERUN TO ELECTRICAL ROOM 104. VERIFY EXACT LOCATION WITH ARCHITECT AND EXACT REQUIREMENTS WITH EQUIPMENT VENDOR PRIOR TO ROUGH-IN.
9. DOORBELL PUSHBUTTON AND INTERCOM STATION, EACH WITH 3/4" C. HOMERUN TO ELECTRICAL ROOM 104. VERIFY EXACT LOCATION WITH ARCHITECT AND EXACT REQUIREMENTS WITH EQUIPMENT VENDOR PRIOR TO ROUGH-IN.
10. FOR COPIER. MOUNT ADJACENT TO DUPLEX RECEPTACLE. SEE 1/E3.1.
11. PROVIDE AND INSTALL FSAS FLASHING BEACONS. VERIFY EXACT LOCATION WITH ARCHITECT AND EXACT REQUIREMENTS WITH EQUIPMENT VENDOR PRIOR TO ROUGH-IN. SEE 2/E5.7. PROVIDE AND INSTALL 120 VOLT BRANCH CIRCUIT TO BEACONS, AS INDICATED.
12. FLUSH WALL MOUNT SPEAKER, COORDINATE LOCATION PRIOR TO ROUGH-IN.
13. PROVIDE AND INSTALL 3/4" CONDUIT WITH PULL WIRE.
14. PROVIDE AND INSTALL 3/4" CONDUIT WITH PULL WIRE HOMERUN TO ELECTICAL ROOM 104. STUB CONDUIT DOWN ON WALL IN TEL/DATA ROOM.
15. NOT USED.
16. FOR USGS MONITOR. CONNECT COMPLETE. VERIFY EXACT LOCATION WITH ARCHITECT PRIOR TO ROUGH-IN.
17. FOR TRAFFIC SIGNAL PRE-EMPT BUTTON, PROVIDE AND INSTALL JUNCTION BOX (+48" A.F.F.) WITH (1) 1-1/4" CONDUIT & PULLWIRE TO TRAFFIC SIGNAL PULLBOX & (1) 1-1/4" CONDUIT & PULLWIRE HOMERUN TO TELE/DATA 104. VERIFY LOCATION WITH ARCHITECT PRIOR TO ROUGH-IN. SEE E1.1.
18. FOR HAM RADIO, PROVIDE & INSTALL 6" SQ. JUNCTION BOX WITH HINGED DOOR & LATCH, & (1) 1-1/2" CONDUIT & PULLWIRE HOMERUN TO TELE/COMM ROOM 104, AND (1) 1-1/2" CONDUIT & PULLWIRE HOMERUN TO MONOPOLE. VERIFY LOCATION WITH ARCHITECT PRIOR TO ROUGH-IN.

## FSAS GENERAL NOTES

**FIRE STATION ALERTING SYSTEM (FSAS)**

A. PROVIDE CONDUIT, PULLWIRE AND OUTLET BOXES FOR PUBLIC ADDRESS AND RING DOWN/ALERTING SYSTEM. THE OWNERS VENDOR SHALL PROVIDE AND INSTALL THE HEAD END EQUIPMENT TO OPERATE THE SYSTEM

B. RING DOWN ALERT SYSTEM
A NUMBER OF THE ELECTRICAL SYSTEMS SHALL BE INTERFACED WITH THE FIRE STATION RING DOWN ALERT SYSTEM. UPON ACTIVATION OF THE ALERT SYSTEM THE FOLLOWING SHALL TAKE PLACE:

a. FIRE STATION PUBLIC ADDRESS SYSTEM IS ACTIVATED TOGETHER WITH ACTIVATION OF THE FLASHING BEACONS.
b. DESIGNATED INTERIOR LIGHTING WILL BE TURNED ON. LIGHTING CONTROL CONTACTORS WITH CONTROL INPUTS FROM THE RING DOWN/ALERTING SYSTEM SHALL BE USED TO CONTROL THE LIGHTING. THE CONTACTORS WILL HAVE A TIME OFF FEATURE TO TURN THE LIGHTS OFF AFTER THE FIRE CREW HAS LEFT THE STATION TO RESPOND TO THE CALL.
c. APPARATUS BAY DOORS WILL NOT BE OPENED BY THE RING DOWN/ALERT SYSTEM.
d. APPARATUS BAY DOORS WILL NOT CLOSE AFTER A SET TIME. THE DOORS WILL BE MANUALLY ACTIVATED BY THE FIRE CREW.
e. ALL ALERTING CONTROLLED LIGHTS WILL ACTIVATE AT FULL BRIGHTNESS FOR A PERIOD OF 'X' MINUTES (DURATION TO BE DETERMINED BY OWNER) AND TURN OFF AUTOMATICALLY.
f. DORMS TO BE SELECTIVELY ALTERED DEPENDING UPON WHICH UNIT ALERTED AND THE POSITION OF WALL SWITCH LOCATED IN EACH DORM.

NOT FOR CONSTRUCTION

O'MAHONY & MYER
ELECTRICAL ENGINEERING and LIGHTING DESIGN
4340 REDWOOD HWY., SUITE 245
SAN RAFAEL, CALIFORNIA 94903
(415) 492-0420/FAX (415) 479-9662
www.ommconsulting.com

REGISTERED PROFESSIONAL ENGINEER
PIETER J. COLENBRANDER
No.14738
Exp. 6/11
ELECTRICAL
STATE OF CALIFORNIA

MOUNTAIN VIEW FIRE STATION #5

2195 N. SHORELINE BLVD
MOUNTAIN VIEW, CA

DATE: 12 . 23 . 09

REVISIONS:

PERMIT SET

SHEET TITLE:
FIRST FLOOR PLAN – SIGNAL & COMMUNICATIONS

DRAWN BY: LN/RS/TV/ME
CHECKED BY: PJC
JOB NO: 20808.00

SHEET E3.3

PIN#- 7779-1_E3.3

P:\2008\MOUNTAIN_VIEW_FIRE_STATION_#5-208067\CAD_E3.3_MVFS5.dwg, 12/22/2009 12:59:39 PM, lnichols

MOUNTAIN_VIEW_FIRE_STATION_#5-208067

## COPPER FEEDER SCHEDULE

| FEEDER | CONDUIT | CONDUCTORS |
|---|---|---|
| 6004N | (2) 4" | 2 SETS: (3)350 MCM, (2)350 MCM NEU. & (1)#1/0 G. |
| 6004 | (2) 4" | 2 SETS: (4)350 MCM & (1)#1/0 G. |
| 6003 | (2) 3" | 2 SETS: (3)350 MCM & (1)#1/0 G. |
| 5004N | (2) 3" | 2 SETS: (3)250 MCM, (2)250 MCM NEU. & (1)#1/0 G. |
| 5004 | (2) 3" | 2 SETS: (4)250 MCM & (1)#1/0 G. |
| 5003 | (2) 3" | 2 SETS: (3)250 MCM & (1)#1/0 G. |
| 4504N | (2) 3" | 2 SETS: (3)250 MCM, (2)250 MCM NEU. & (1)#1/0 G. |
| 4504 | (2) 3" | 2 SETS: (4)#4/0 & (1)#1/0 G. |
| 4503 | (2) 2" | 2 SETS: (3)#4/0 & (1)#1/0 G. |
| 4004 | (1) 4" | (4)500 MCM & (1)#1/0 G. |
| 4003 | (1) 4" | (3)500 MCM & (1)#1/0 G. |
| 3504N | (1) 4" | (3)500 MCM, (2)500 MCM NEU. & (1)#2 G. |
| 3504 | (1) 4" | (4)500 MCM & (1)#2 G. |
| 3503 | (1) 3" | (3)500 MCM & (1)#2 G. |
| 3004N | (1) 4" | (3)350 MCM, (2)350 MCM NEU. & (1)#1/0 G. |
| 3004 | (1) 3" | (4)350 MCM & (1)#2 G. |
| 3003 | (1) 3" | (3)350 MCM & (1)#2 G. |
| 2754 | (1) 3" | (4)300 MCM & (1)#4 G. |
| 2753 | (1) 3" | (3)300 MCM & (1)#4 G. |
| 2504N | (1) 3" | (3)250 MCM, (2)250 MCM NEU. & (1)#4 G. |
| 2504 | (1) 3" | (4)250 MCM & (1)#4 G. |
| 2503 | (1) 2" | (3)250 MCM & (1)#4 G. |
| 2254N | (1) 3" | (3)#4/0, (2)#4/0 NEU. & (1)#4 G. |
| 2254 | (1) 3" | (4)#4/0 & (1)#4 G. |
| 2253 | (1) 2" | (3)#4/0 & (1)#4 G. |
| 2004N | (1) 3" | (3)#3/0, (2)#3/0 NEU. & (1)#4 G. |
| 2004 | (1) 2" | (4)#3/0 & (1)#4 G. |
| 2003 | (1) 2" | (3)#3/0 & (1)#4 G. |
| 1754N | (1) 2" | (3)#2/0, (2)#2/0 NEU. & (1)#6 G. |
| 1754 | (1) 2" | (4)#2/0 & (1)#6 G. |
| 1753 | (1) 2" | (3)#2/0 & (1)#6 G. |
| 1504N | (1) 2" | (3)#1/0, (2)#1/0 NEU. & (1)#6 G. |
| 1504 | (1) 2" | (4)#1/0 & (1)#6 G. |
| 1503 | (1) 2" | (3)#1/0 & (1)#6 G. |
| 1254N | (1) 2" | (3)#1, (2)#1 NEU. & (1)#6 G. |
| 1254 | (1) 2" | (4)#1 & (1)#6 G. |
| 1253 | (1) 1 1/4" | (3)#1 & (1)#6 G. |
| 1004N | (1) 2" | (3)#2, (2)#2 NEU. & (1)#6 G. |
| 1004 | (1) 2" | (4)#2 & (1)#6 G. |
| 1003 | (1) 1 1/4" | (3)#2 & (1)#6 G. |
| 904 | (1) 1 1/4" | (4)#2 & (1)#6 G. |
| 903 | (1) 1 1/4" | (3)#2 & (1)#6 G. |
| 804 | (1) 1 1/4" | (4)#4 & (1)#6 G. |
| 803 | (1) 1" | (3)#4 & (1)#6 G. |
| 704 | (1) 1 1/4" | (4)#4 & (1)#8 G. |
| 703 | (1) 1" | (3)#4 & (1)#8 G. |
| 604 | (1) 1 1/4" | (4)#6 & (1)#10 G. |
| 603 | (1) 1" | (3)#6 & (1)#10 G. |
| 602 | (1) 1" | (2)#6 & (1)#10 G. |
| 504 | (1) 1" | (4)#8 & (1)#10 G. |
| 503 | (1) 3/4" | (3)#8 & (1)#10 G. |
| 404N | (1) 1" | (3)#8, (2)#8 NEU. & (1)#10 G. |
| 404 | (1) 3/4" | (4)#8 & (1)#10 G. |
| 403 | (1) 3/4" | (3)#8 & (1)#10 G. |

## FEEDER TAG KEY

400 4 N
- N — INDICATES DOUBLE NEUTRAL
- 4 — WIRE QUANTITY
- 400 — FEEDER AMPACITY

NOTE: NOT ALL FEEDERS ON THIS SCHEDULE ARE NECESSARILY USED ON THIS PROJECT.

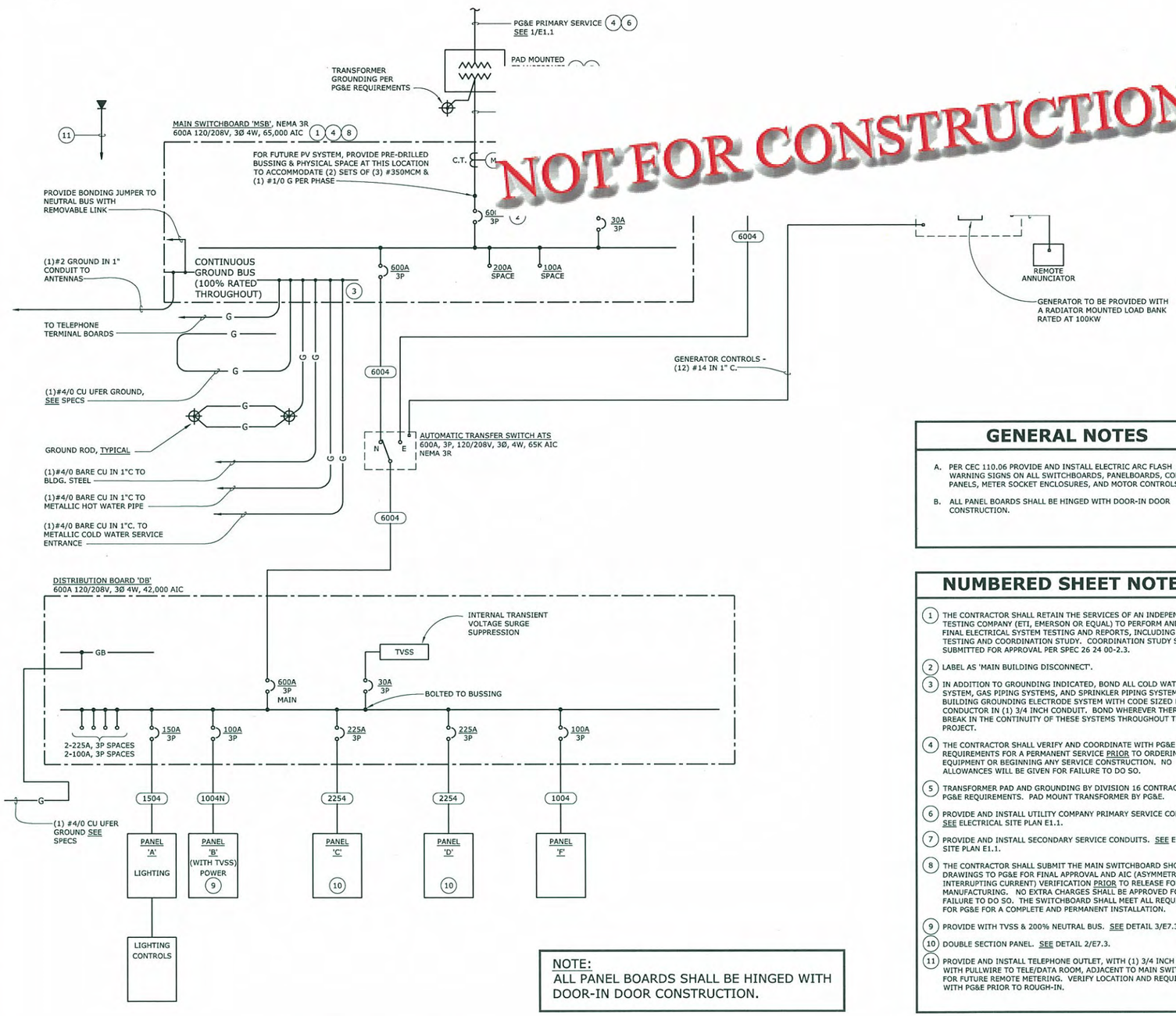


NOT FOR CONSTRUCTION

NOTE:
ALL PANEL BOARDS SHALL BE HINGED WITH DOOR-IN DOOR CONSTRUCTION.

## SINGLE LINE DIAGRAM

SCALE: NONE

1 / E5.1

## GENERAL NOTES

A. PER CEC 110.06 PROVIDE AND INSTALL ELECTRIC ARC FLASH WARNING SIGNS ON ALL SWITCHBOARDS, PANELBOARDS, CONTROL PANELS, METER SOCKET ENCLOSURES, AND MOTOR CONTROLS.

B. ALL PANEL BOARDS SHALL BE HINGED WITH DOOR-IN DOOR CONSTRUCTION.

## NUMBERED SHEET NOTES

1. THE CONTRACTOR SHALL RETAIN THE SERVICES OF AN INDEPENDENT TESTING COMPANY (ETI, EMERSON OR EQUAL) TO PERFORM AND PREPARE FINAL ELECTRICAL SYSTEM TESTING AND REPORTS, INCLUDING MEGGER TESTING AND COORDINATION STUDY. COORDINATION STUDY SHALL BE SUBMITTED FOR APPROVAL PER SPEC 26 24 00-2.3.
2. LABEL AS 'MAIN BUILDING DISCONNECT'.
3. IN ADDITION TO GROUNDING INDICATED, BOND ALL COLD WATER PIPING SYSTEM, GAS PIPING SYSTEMS, AND SPRINKLER PIPING SYSTEMS TO THE BUILDING GROUNDING ELECTRODE SYSTEM WITH CODE SIZED BONDING CONDUCTOR IN (1) 3/4 INCH CONDUIT. BOND WHEREVER THERE IS A BREAK IN THE CONTINUITY OF THESE SYSTEMS THROUGHOUT THE PROJECT.
4. THE CONTRACTOR SHALL VERIFY AND COORDINATE WITH PG&E ALL REQUIREMENTS FOR A PERMANENT SERVICE PRIOR TO ORDERING ANY EQUIPMENT OR BEGINNING ANY SERVICE CONSTRUCTION. NO ALLOWANCES WILL BE GIVEN FOR FAILURE TO DO SO.
5. TRANSFORMER PAD AND GROUNDING BY DIVISION 16 CONTRACTOR PER PG&E REQUIREMENTS. PAD MOUNT TRANSFORMER BY PG&E.
6. PROVIDE AND INSTALL UTILITY COMPANY PRIMARY SERVICE CONDUITS. SEE ELECTRICAL SITE PLAN E1.1.
7. PROVIDE AND INSTALL SECONDARY SERVICE CONDUITS. SEE ELECTRICAL SITE PLAN E1.1.
8. THE CONTRACTOR SHALL SUBMIT THE MAIN SWITCHBOARD SHOP DRAWINGS TO PG&E FOR FINAL APPROVAL AND AIC (ASYMMETRIC INTERRUPTING CURRENT) VERIFICATION PRIOR TO RELEASE FOR MANUFACTURING. NO EXTRA CHARGES SHALL BE APPROVED FOR FAILURE TO DO SO. THE SWITCHBOARD SHALL MEET ALL REQUIREMENTS FOR PG&E FOR A COMPLETE AND PERMANENT INSTALLATION.
9. PROVIDE WITH TVSS & 200% NEUTRAL BUS. SEE DETAIL 3/E7.3.
10. DOUBLE SECTION PANEL. SEE DETAIL 2/E7.3.
11. PROVIDE AND INSTALL TELEPHONE OUTLET, WITH (1) 3/4 INCH CONDUIT WITH PULLWIRE TO TELE/DATA ROOM, ADJACENT TO MAIN SWITCHBOARD FOR FUTURE REMOTE METERING. VERIFY LOCATION AND REQUIREMENTS WITH PG&E PRIOR TO ROUGH-IN.


O'MAHONY & MYER
ELECTRICAL ENGINEERING and LIGHTING DESIGN
4340 REDWOOD HWY., SUITE 245
SAN RAFAEL, CALIFORNIA 94903
(415) 492-0420/FAX (415) 479-9662
www.ommconsulting.com


REGISTERED PROFESSIONAL ENGINEER PIETER J. COLENBRANDER No.14738 Exp. 6/11 ELECTRICAL STATE OF CALIFORNIA

MOUNTAIN VIEW FIRE STATION #5

2195 N. SHORELINE BLVD
MOUNTAIN VIEW, CA

DATE: 12 . 23 . 09

REVISIONS:

PERMIT SET

SHEET TITLE:
SINGLE LINE DIAGRAM

DRAWN BY: TV/ME/LN
CHECKED BY: PJC
JOB NO: 20808.00

SHEET E5.1

PIN#- 7779-1_E5.1

P:\2008\MOUNTAIN_VIEW_FIRE_STATION_#5-208067\CAD_E5.1_MVFS5.dwg, 12/22/2009 1:04:41 PM, lnichols

MOUNTAIN_VIEW_FIRE_STATION_#5-208067

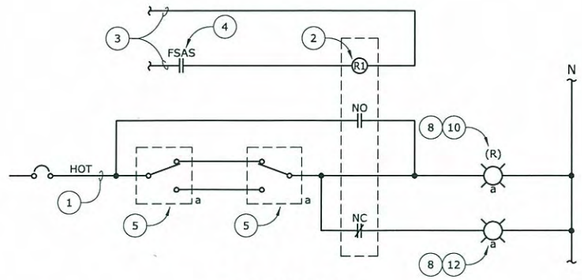


BEDROOM #1

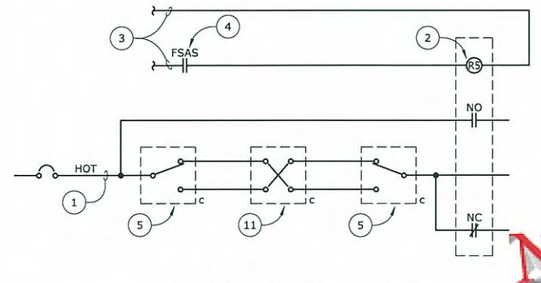


2ND FLOOR HALLWAY

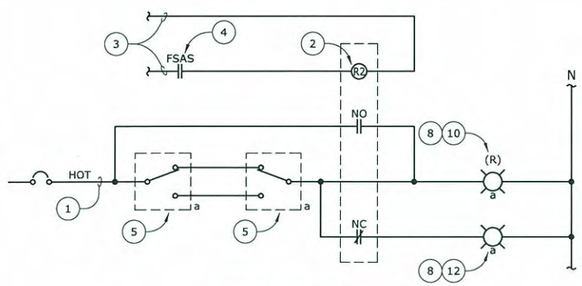


BEDROOM #2

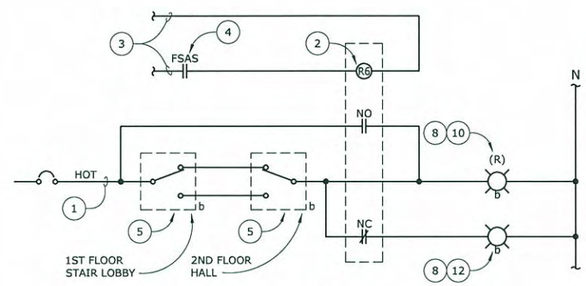


STAIR & POLE

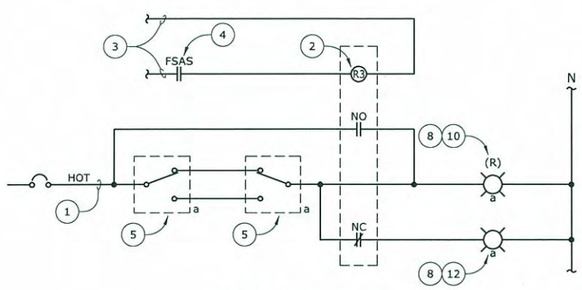


BEDROOM #3

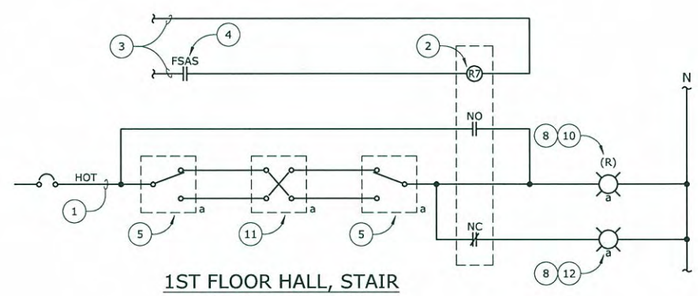


1ST FLOOR HALL, STAIR
LOBBY & RIP/RUN

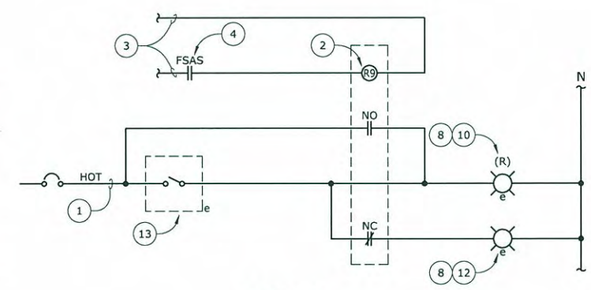


DINING

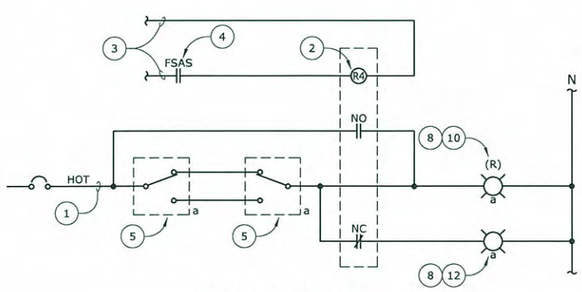


BEDROOM #4

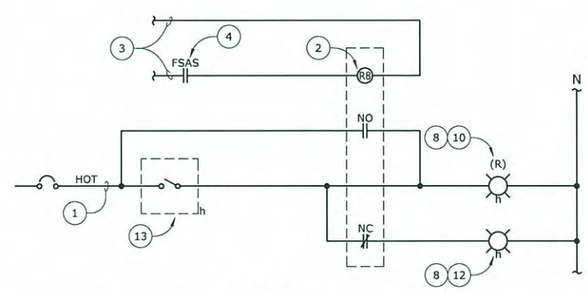


KITCHEN

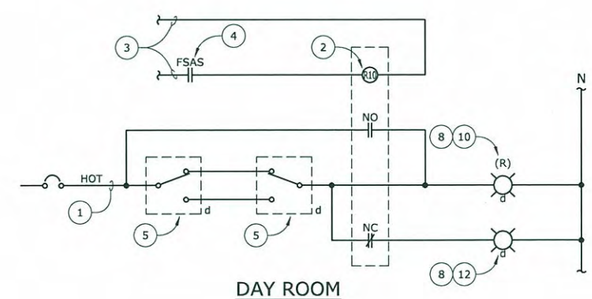


DAY ROOM

**SINGLE LINE DIAGRAM - FSAS LIGHTING CONTROLS**

SCALE: NONE

1 / E5.6

## NUMBERED SHEET NOTES

1. LIGHTING BRANCH CIRCUIT. SEE LIGHTING FLOOR PLANS FOR CIRCUIT NUMBERS.
2. PROVIDE AND INSTALL ELECTRICALLY HELD CONTROL RELAY, WITH 20AMP, 120VOLT RATED CONTACTS IN NEMA 1 ENCLOSURE. COORDINATE COIL
8. LIGHTING FIXTURES. SEE LIGHTING FLOOR PLANS FOR FIXTURE TYPES AND QUANTITY. FIXTURES EQUIPPED WITH INTEGRAL EMERGENCY BALLAST ALSO REQUIRE NON SWITCHED HOT FOR THE BALLAST.
9. NOT USED.
10. RESPONSE LIGHTING TO COME ON AUTOMATICALLY, AND TIME DELAY OFF, UPON CONTACT CLOSURE IN FSAS EQUIPMENT IN ELECTRICAL ROOM. COORDINATE PROGRAMMING WITH OWNER'S FSAS VENDOR.
11. 4-WAY SWITCH AS SHOWN ON LIGHTING FLOOR PLANS.
12. FIXTURE IS NOT TO TURN ON WHEN FSAS SYSTEM IS ACTIVATED. UPON FSAS CONTACT CLOSURE (SEE NOTE 4 ABOVE) SWITCHED POWER TO THIS LIGHT FIXTURE(S) WILL BE DISCONNECTED VIA THE NORMALLY CLOSED CONTACT IN THE CONTROL RELAY.
13. SINGLE POLE SWITCH AS SHOWN ON PLANS.

NOTE:
SEE 1/E5.8 FOR APPARATUS BAY FSAS LIGHTING CONTROLS

NOT FOR CONSTRUCTION

O'MAHONY & MYER
ELECTRICAL ENGINEERING and LIGHTING DESIGN
4340 REDWOOD HWY., SUITE 245
SAN RAFAEL, CALIFORNIA 94903
(415) 492-0420/FAX (415) 479-9662
www.ommconsulting.com

REGISTERED PROFESSIONAL ENGINEER
PIETER J. COLENBRANDER
No.14738
Exp. 6/11
ELECTRICAL
STATE OF CALIFORNIA

MOUNTAIN VIEW
FIRE STATION #5

2195 N. SHORELINE BLVD
MOUNTAIN VIEW, CA

DATE: 12 . 23 . 09

REVISIONS:

PERMIT
SET

SHEET TITLE:
FIRE STATION
ALERTING
SYSTEM
DIAGRAMS

DRAWN BY: LN
CHECKED BY: PJC
JOB NO: 20808.00

SHEET
E5.6

P:\2008\MOUNTAIN_VIEW_FIRE_STATION_#5-208067\CAD_E5.6 + E5.7_MVFS5.dwg, 12/22/2009 1:10:11 PM, lnichols

PIN#- 7779-1_E5.6

MOUNTAIN_VIEW_FIRE_STATION_#5-208067

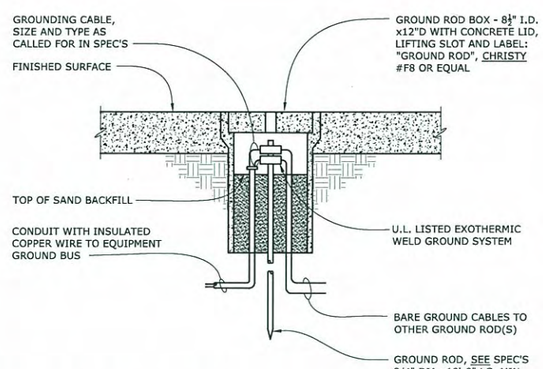


## GROUND ROD INSTALLATION

SCALE: NOT TO SCALE
FILE: L:\DETAILS\POWER\GROUND\PGROU001

6 / E7.1

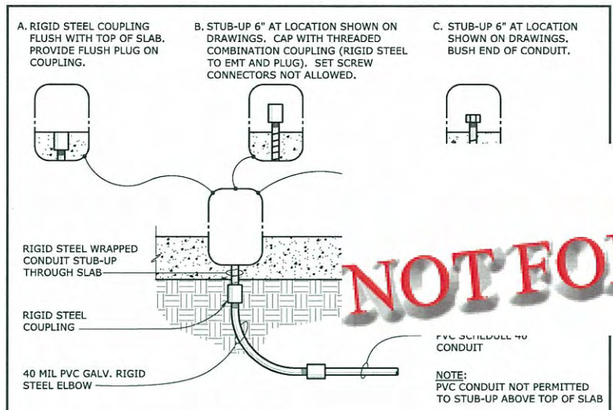


## CONDUIT STUB-UP DETAILS

SCALE: NONE
FILE: L:\POWER\CONDUIT\PCOND007 (MOD.)

4 / E7.1

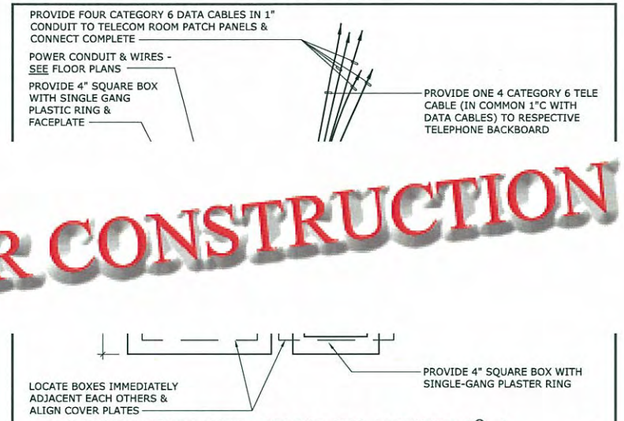


## COMBINATION POWER, TELE/DATA OUTLETS

SCALE: NONE
FILE: L:\OOUTLET\CPTD-OT1 (MOD)

1 / E7.1

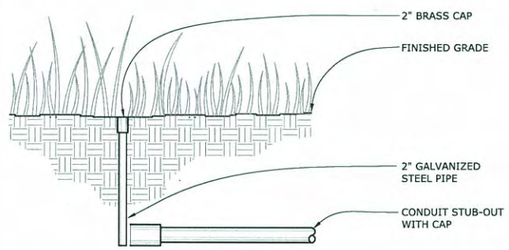


NOTES:

1. ENGRAVE BRASS CAP INDICATING FUNCTION & FINAL DESTINATION
2. RECORD ALL ACTUAL STUB-OUT LOCATIONS ON AS-BUILT DRAWINGS

## CONDUIT STUB-OUT

SCALE: NONE
FILE: L:\POWER\CONDUIT\PCOND005

7 / E7.1

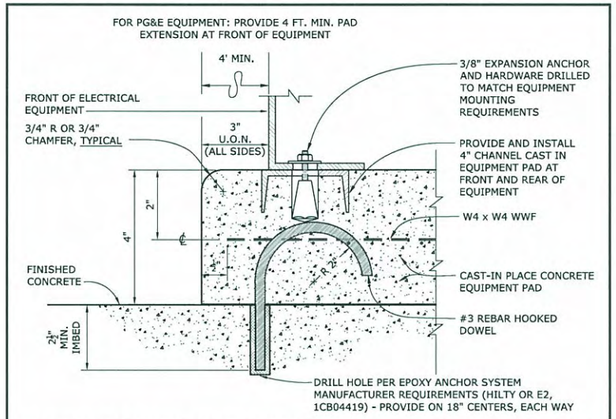


## ELECTRICAL HOUSEKEEPING PAD

SCALE: NOT TO SCALE
FILE: L:\DETAILS\POWER\PADS\PPADS015 (MOD.)

5 / E7.1

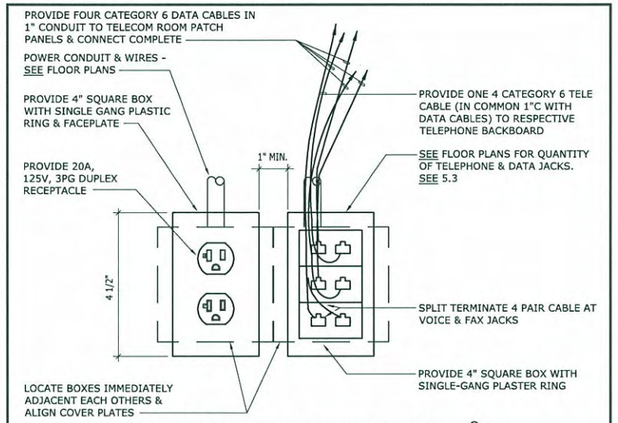


## COMBINATION POWER, TELE/DATA OUTLETS

SCALE: NONE
FILE: L:\OOUTLET\CPTD-OT1 (MOD)

2 / E7.1

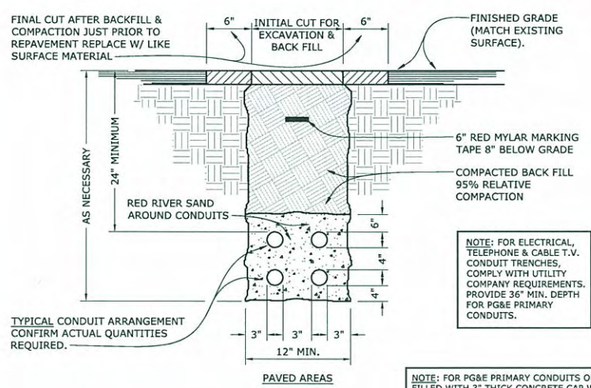


NOTE: FOR ELECTRICAL, TELEPHONE & CABLE T.V. CONDUIT TRENCHES, COMPLY WITH UTILITY COMPANY REQUIREMENTS. PROVIDE 36" MIN. DEPTH FOR PG&E PRIMARY CONDUITS.

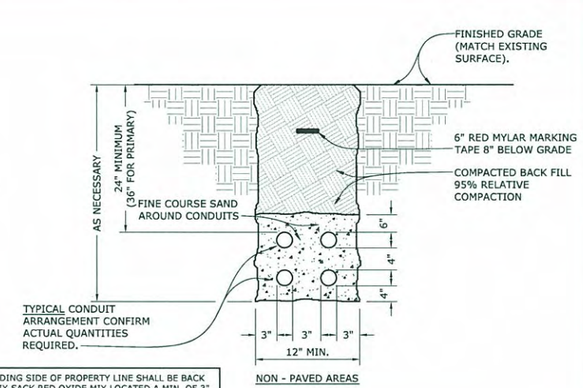


NOTE: FOR PG&E PRIMARY CONDUITS ON BUILDING SIDE OF PROPERTY LINE SHALL BE BACK FILLED WITH 3" THICK CONCRETE CAP WITH SIX SACK RED OXIDE MIX LOCATED A MIN. OF 3" ABOVE THE TOP SURFACE OF CONDUIT, OR DIRECTLY ON TOP OF 6" SAND BED COVER.

## TYPICAL TRENCH SECTIONS

SCALE: NONE
FILE: L:\POWER\TRENCH\PTREN005 (MOD.)

8 / E7.1

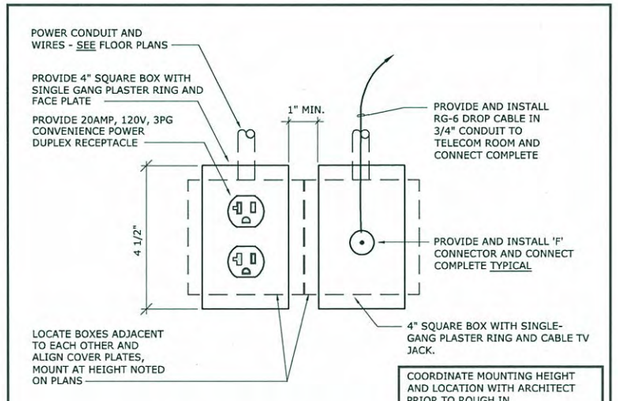


COORDINATE MOUNTING HEIGHT AND LOCATION WITH ARCHITECT PRIOR TO ROUGH IN.

## TYPICAL POWER AND CABLE TV OUTLET ELEVATION

SCALE: NONE
FILE: L:\POWER\PVIDEO\PPVIS001 (MOD.)

3 / E7.1

O'MAHONY & MYER
ELECTRICAL ENGINEERING and LIGHTING DESIGN
4340 REDWOOD HWY, SUITE 245
SAN RAFAEL, CALIFORNIA 94903
(415) 492-0420/FAX (415) 479-9662
www.ommconsulting.com

REGISTERED PROFESSIONAL ENGINEER
PETER J. COLEMBACHER
No.14738
Exp. 6/11
ELECTRICAL
STATE OF CALIFORNIA

MOUNTAIN VIEW FIRE STATION #5

2195 N. SHORELINE BLVD
MOUNTAIN VIEW, CA

DATE: 12 . 23 . 09

REVISIONS:

PERMIT SET

SHEET TITLE:
DETAILS

DRAWN BY: TV
CHECKED BY: PJC
JOB NO: 20808.00

SHEET
E7.1

NOT FOR CONSTRUCTION

P:\2008\MOUNTAIN_VIEW_FIRE_STATION_#5-208067\CAD_E7.1_MVFS5.dwg, 12/22/2009 1:13:08 PM, lnichols

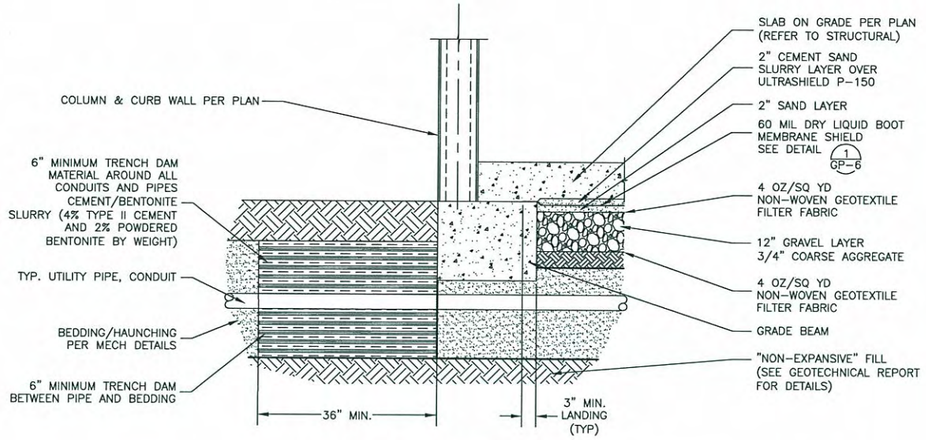


7 TRENCH DAM DETAIL
NOT TO SCALE

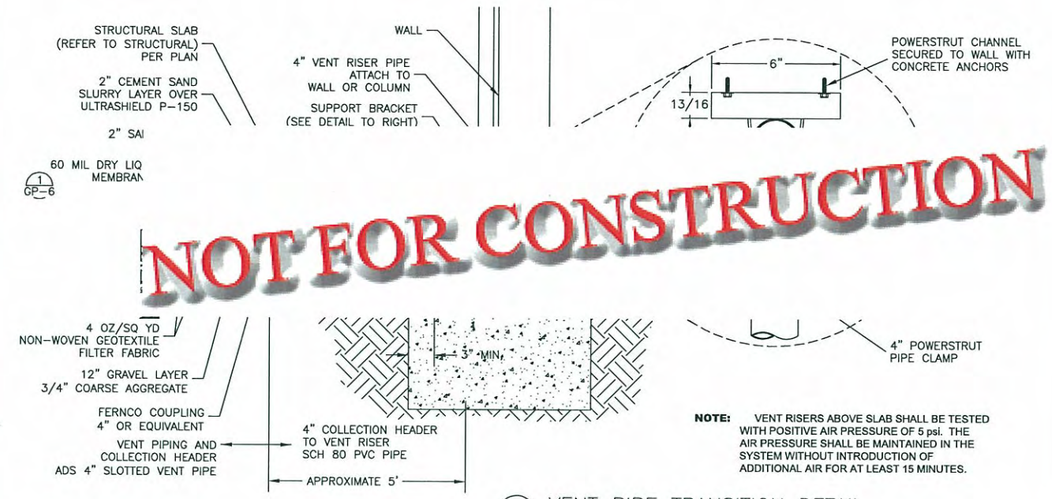


NOT FOR CONSTRUCTION

**NOTE:** VENT RISERS ABOVE SLAB SHALL BE TESTED WITH POSITIVE AIR PRESSURE OF 5 psi. THE AIR PRESSURE SHALL BE MAINTAINED IN THE SYSTEM WITHOUT INTRODUCTION OF ADDITIONAL AIR FOR AT LEAST 15 MINUTES.

10 VENT PIPE TRANSITION DETAIL
NOT TO SCALE

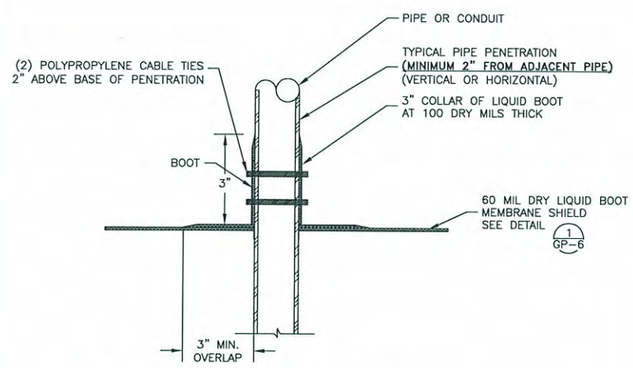


8 PIPE PENETRATION BOOT DETAIL
NOT TO SCALE

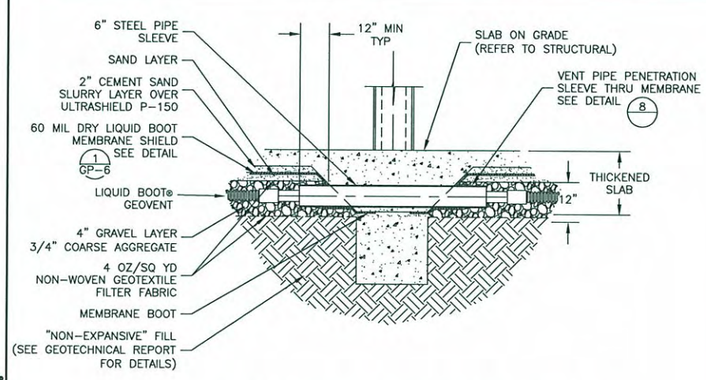


9 THICKENED SLAB/FOOTING PENETRATION DETAIL
NOT TO SCALE

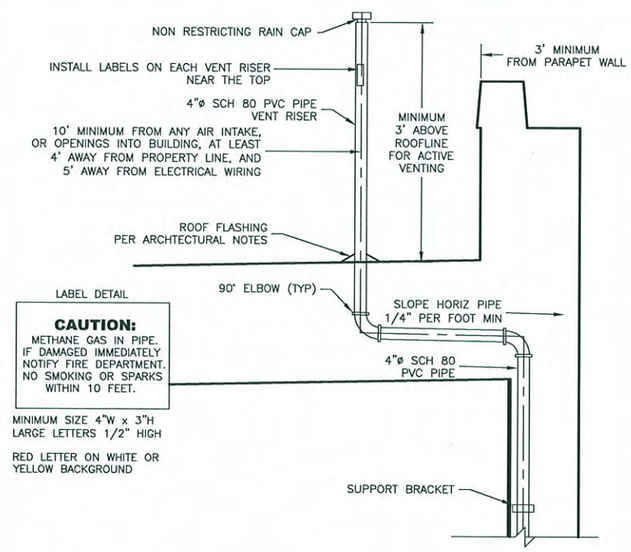


11 VENT RISER DETAIL
NOT TO SCALE

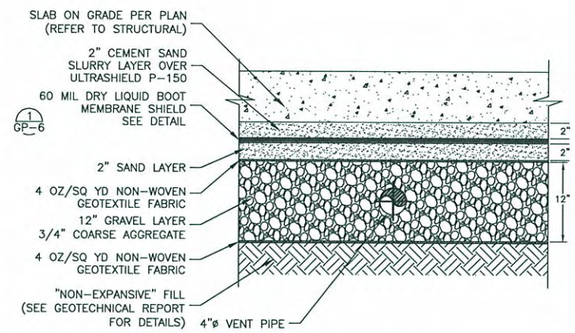


12 PERFORATED VENT PIPE AND GEOMEMBRANE SECTION
NOT TO SCALE

## ACTIVATION THRESHOLDS FOR ACTIVE SYSTEM

| | | SYSTEM COMPONENT TRIGGERED BY GAS SENSORS AND CONTROLLERS | | |
|---|---|---|---|---|
| | | DETECTOR IN THE LOWEST OCCUPIED SPACE | | GAS SENSOR IN SUBSLAB |
| SYSTEM NAME | SYSTEM COMPONENT | MORE THAN 10% LEL | MORE THAN 25% LEL | MORE THAN 75% LEL |
| BELOW MEMBRANE SYSTEM | WARNING ANNUNCIATOR | | | X |
| | MECHANICAL EXTRACTION FAN | | | X |
| LOWEST OCCUPIED SPACE SYSTEM | ALARM (AUDIBLE AND VISIBLE) | | X | |
| | WARNING ANNUNCIATOR | X | X | |

13 ACTIVATION THRESHOLDS
NOT TO SCALE

MOUNTAIN VIEW FIRE STATION #5
2195 N. SHORELINE BLVD
MOUNTAIN VIEW, CA

DATE: 12 . 23 . 09

REVISIONS:

PERMIT SET

SHEET TITLE:
DETAILS 2

DRAWN BY: ---
CHECKED BY: ---
JOB NO: 20808.00

SHEET
GP-7

PIN#- 7779-1_GP-7

file
date

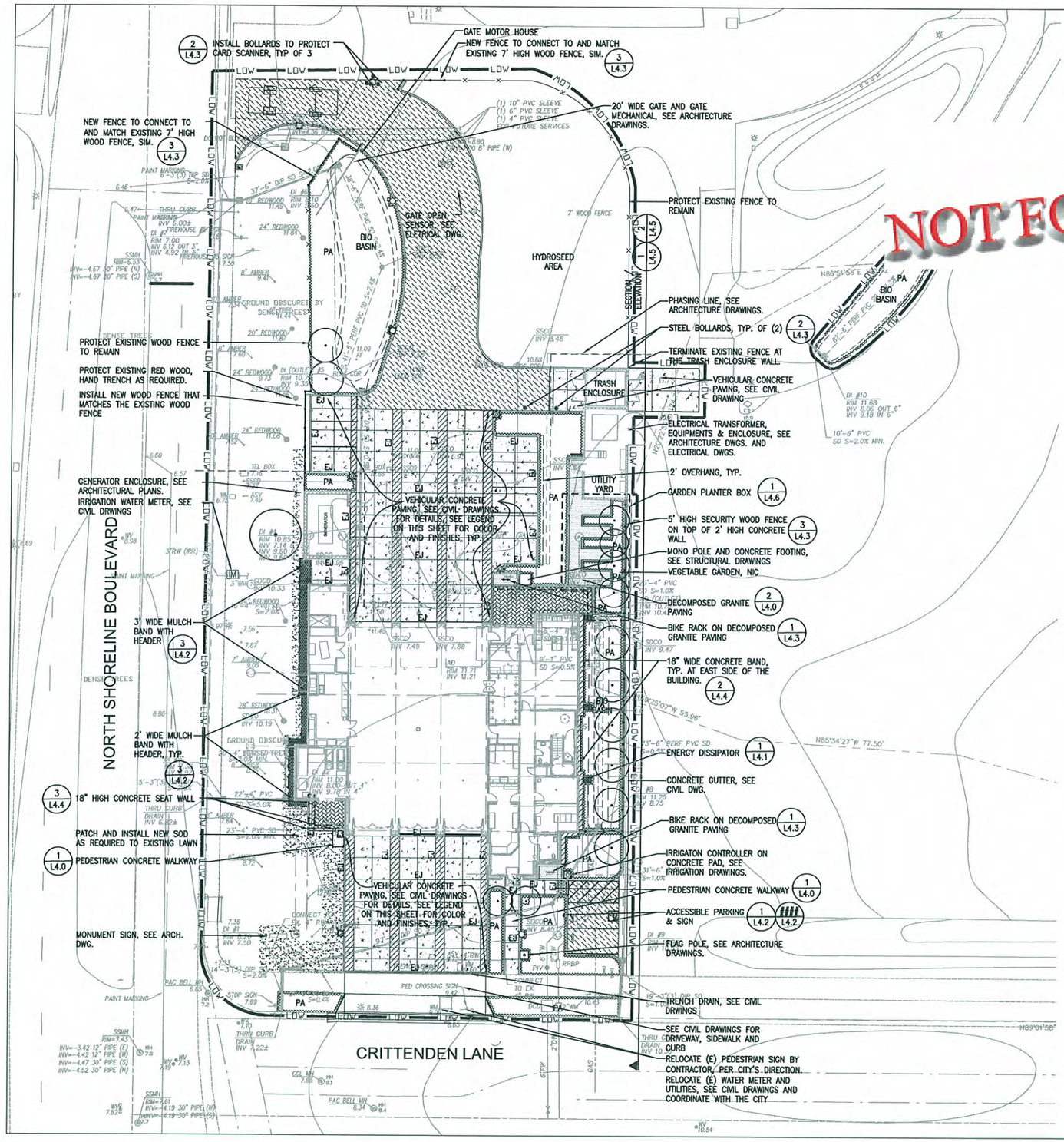


# MATERIALS LEGEND

| SYMBOL | DESCRIPTION |
|---|---|
| LOW | LIMIT OF WORK LINE |
| | AC PAVING, SEE CIVIL DRAWINGS |
| | CALSTONE – PERMEABLE PAVER SYSTEM, QUARRY STONE, (408) 984-8800. COLOR – TUSCAN GOLD, PATTERN PER DETAIL AND MANUFACTURER. (1/L4.4) |
| PA | PLANTING AREA, SEE PLANTING PLAN SHEET L2.0 AND (5/L4.0) |
| | TURF, SEE PLANTING PLAN SHEET L2.0 AND (5/L4.0) |
| | DECOMPOSED GRANITE (2/L4.0) |
| | CONCRETE SEATWALL (3/L4.4) |
| | 2' WIDE MULCH STRIP WITH HEADER (3/L4.2) |
| | TRUNCATED DOMES (5/L4.2) |
| | TREES, SEE PLANTING PLAN SHEET L2.0 |
| 12" PINE 12.20 | EXISTING TREE |
| | MECHANICAL GATE, SEE ARCHITECTURAL DRAWINGS |
| | PEDESTRIAN GATE, SEE ARCHITECTURAL DRAWINGS |
| | BIKE PARKING RACK BY BIKEPARKING.COM (415) 333-6428 WCR02-IG, SS304 SCHED. 40 PIPE, IN-GROUND WITH EXTENSION 3/8"X6" SOLID ROD CROSS MEMBERS, STAINLESS #4 BRUSH FINISH (-SS) (1/L4.3) |
| | 4" DIA. (4.5" O.D.) SCH. 40 ASTM A53/A53M STEEL BOLLARD (2/L4.3) |
| | WHEEL STOP |
| | 7' HIGH WOOD FENCE SIMILAR TO (3/L4.3) |
| | 5' HIGH WOOD FENCE ON TOP OF 2' HIGH RETAINING WALL (3/L4.3) |
| | EXISTING 7' HIGH WOOD FENCE TO PROTECT OR REPLACE IN KIND |
| | PERFORATED DRAIN PIPE AND BURIED CLEAN OUTS, SEE CIVIL DRAWINGS FOR CONNECTIONS (1/L4.4) (4/L4.4) |
| | DRAIN INLET, SEE CIVIL DRAWINGS |
| | MOTION SENSOR POLE LIGHT, SEE ELECTRICAL PLAN |
| | POLE LIGHT, SEE ELECTRICAL PLAN |

# MATERIALS NOTES

1. SEE CIVIL DRAWINGS FOR THE GRADING AND UTILITY LOCATIONS.
2. SEE IRRIGATION DRAWINGS FOR THE LOCATION OF IRRIGATION CONTROLER.
3. SEE ARCHITECT DRAWINGS FOR THE TRASH ENCLOSURE, GENERATOR ENCLOSURE AND THE UTILITY YARD ENCLOSURE.
4. SEE ELECTRICAL DRWINGS FOR THE LIGHT FIXTURE AND ELECTRICAL POWER TO THE IRRIGATION CONTROLLER.

NORTH

0' 20'
1"=20'-0"

NOT FOR CONSTRUCTION

CARDUCCI & ASSOCIATES, INC.
LANDSCAPE ARCHITECTURE PLANNING
IRRIGATION DESIGN URBAN DESIGN
555 BEACH STREET, 4TH FLOOR
SAN FRANCISCO, CALIFORNIA 94133
PHONE (415) 674-0990
FAX (415) 674-0999

© 2009 CARDUCCI & ASSOCIATES, INC.

If the contractor encounters errors or discrepancies on the drawings, or site conditions which prevent or delay the completion of work as indicated, the contractor shall notify the owner and landscape architect by the time of bid of all such errors, discrepancies and omissions. The contractor shall indemnify and hold the landscape architect and the owner harmless if after contracting for the work he has monetary damage because of site conditions, errors, discrepancies or omissions at the time of bid

LICENSED LANDSCAPE ARCHITECT
WINCAN P. LAI
No. 2554
Expires 12/31/11
STATE OF CALIFORNIA

Only the original, signed hard copy of this drawing constitutes Carducci & Associates professional work product, electronic copies do not. Carducci & Associates will not be responsible for any modifications made to this drawing electronic or otherwise that is not signed by Carducci & Associates.

MOUNTAIN VIEW FIRE STATION #5

2195 N. SHORELINE BLVD.
MOUNTAIN VIEW, CA

DATE: 12. 23. 09

REVISIONS:

PERMIT SET

SHEET TITLE:

MATERIALS PLAN

DRAWN BY:

CHECKED BY:

JOB NO:

SHEET L1.0

PIN#- 7779-1_L1.0

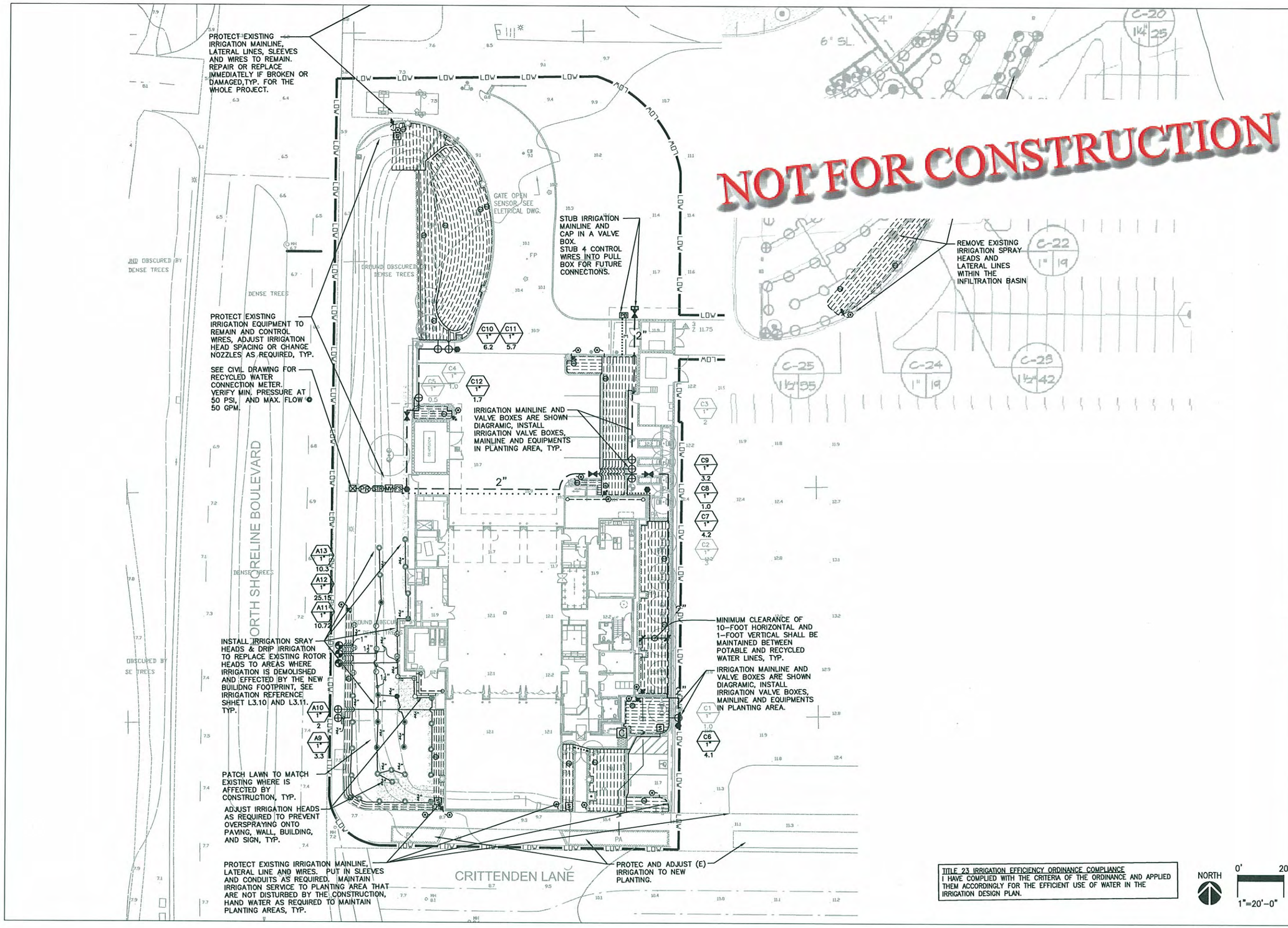


NOT FOR CONSTRUCTION

TITLE 23 IRRIGATION EFFICIENCY ORDINANCE COMPLIANCE
I HAVE COMPLIED WITH THE CRITERIA OF THE ORDINANCE AND APPLIED THEM ACCORDINGLY FOR THE EFFICIENT USE OF WATER IN THE IRRIGATION DESIGN PLAN.

NORTH

0' 20'
1"=20'-0"


CARDUCCI & ASSOCIATES, INC.
LANDSCAPE ARCHITECTURE PLANNING
IRRIGATION DESIGN URBAN DESIGN
555 BEACH STREET, 4TH FLOOR
SAN FRANCISCO, CALIFORNIA 94133
PHONE (415) 674-0990
FAX (415) 674-0999



© 2009 CARDUCCI & ASSOCIATES, INC.


If the contractor encounters errors or discrepancies on the drawings, or site conditions which prevent or delay the completion of work as indicated, the contractor shall notify the owner and landscape architect by the time of bid of all such errors, discrepancies and omissions. The contractor shall indemnify and hold the landscape architect and the owner harmless if after contracting for the work he has monetary damage because of site conditions, errors, discrepancies or omissions at the time of bid

LICENSED LANDSCAPE ARCHITECT
VINCENT P. LATTANZIO
No. 2554
8/31/11
Licensed Date
12/23/09
Date
STATE OF CALIFORNIA


Only the original, signed hard copy of this drawing constitutes Carducci & Associates professional work product, electronic copies do not. Carducci & Associates will not be responsible for any modifications made to this drawing electronic or otherwise that is not signed by Carducci & Associates.


MOUNTAIN VIEW
FIRE STATION #5

2195 N. SHORELINE BLVD.
MOUNTAIN VIEW, CA

DATE: 12. 23. 09

REVISIONS:

PERMIT SET

SHEET TITLE:
IRRIGATION PLAN

DRAWN BY:
CHECKED BY:
JOB NO:

SHEET
L3.03

PIN#- 7779-1_L3.03

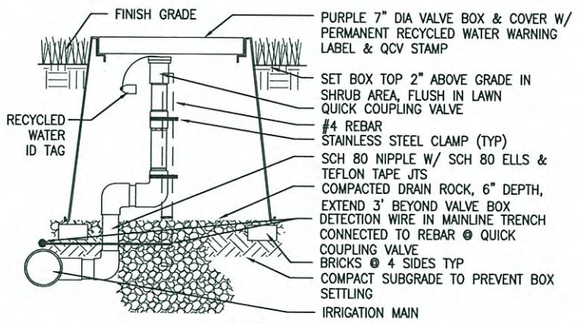


NOTES:
1. PURPLE VALVE BOX & LID 7" DIA x 9 1/2" DEEP
2. INSTALL TO PREVENT SETTLING
3. CENTER QCV IN BOX
4. POSITION QVC TO ALLOW CONVENIENT, ACCESSIBLE ACCESS TO QCV KEY & HOSE SWIVEL.

## 7 QUICK COUPLING VALVE – RCW
SCALE: 3" = 1'

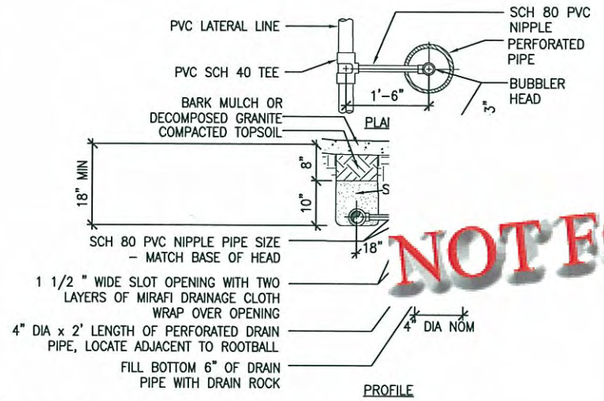


## 4 DEEP WATERING TUBE BUBBLER
SCALE: 3/4" = 1'

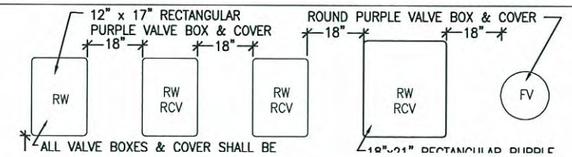


NOT FOR CONSTRUCTION

5. AVOID HEAVILY COMPACTING SOIL AROUND VALVE BOXES TO PREVENT COLLAPSE AND DEFORMATION OF VALVE BOX SIDES.
6. INSTALL EXTENSION BY VALVE BOX MANUFACTURER AS REQUIRED TO COMPLETELY ENCLOSE ASSEMBLY FOR EASY ACCESS.
7. IF KNOCKOUT HOLES ON VALVE BOXES NEED TO BE ENLARGED, COVER REMAINING "OPEN AREAS" WITH HARVEY PLASTIC (1/8" MIN.). DO NOT USE CARD BOARD OR OTHER QUICKLY DEGRADING PRODUCTS.

## 1 VALVE BOX INSTALLATION – RCW
SCALE: 3/4" = 1'

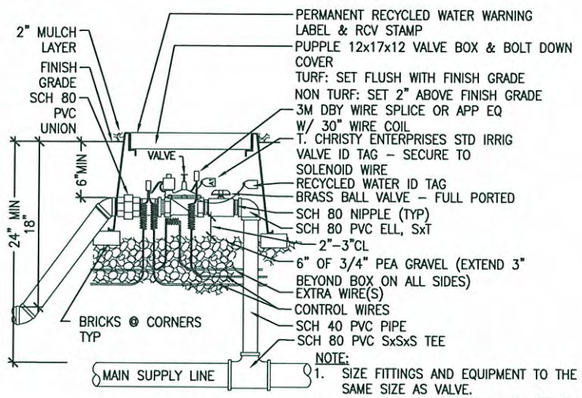


NOTE:
1. SIZE FITTINGS AND EQUIPMENT TO THE SAME SIZE AS VALVE.
2. TAPE THREADED FITTINGS WITH TEFLON TAPE.
3. COMPACT SOIL AROUND BOX TO 90% MIN.

## 8 REMOTE CONTROL VALVE – RCW
SCALE: 1 1/2" = 1'

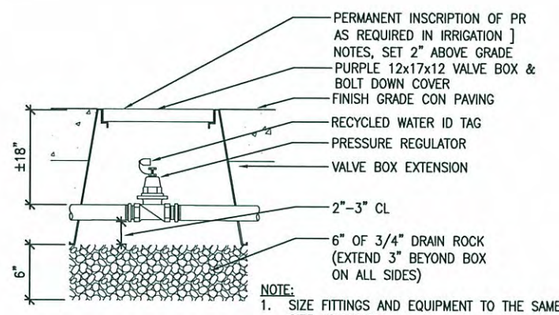


NOTE:
1. SIZE FITTINGS AND EQUIPMENT TO THE SAME SIZE AS VALVE.
2. TAPE THREADED FITTINGS WITH TEFLON TAPE.
3. COMPACT SOIL AROUND BOX TO 90% MIN.

## 5 PRESSURE REGULATOR
SCALE: 1 1/2" = 1'

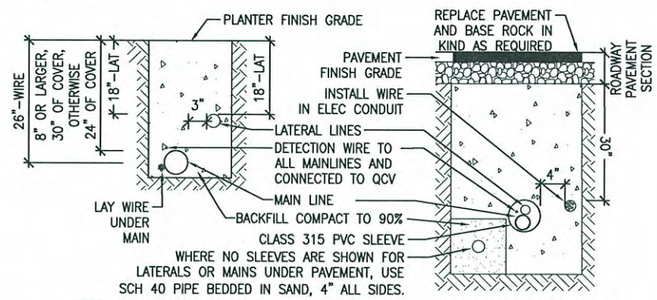


NOTE: TIE A LOOSE 20" LOOP IN WIRE AT CHANGES IN DIRECTION AND AT INTERVALS OF 100'.
INSTALL PIPE, WIRE AND SLEEVES UNDER PAVEMENT PRIOR TO PLACEMENT OF PAVEMENT AND MINIMUM OF 30" OF COVER.
BUNDLE AND TAPE WIRE AT 10' INTERVALS
SOIL BACKFILL TO BE FREE OF ROCK, DIRT CLODS, AND DEBRIS GREATER THAN 1/2" DIAMETER WITHIN 4" OF PIPE.
ALTERNATE: BACKFILL WITH SAND IMPORT.

## 2 TRENCHING – PUBLIC
SCALE: 1" = 1'

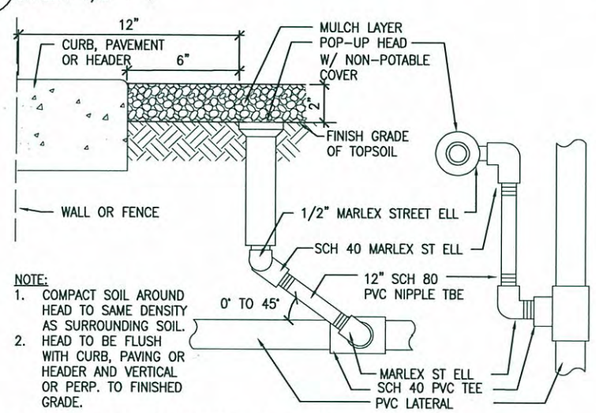


NOTE:
1. COMPACT SOIL AROUND HEAD TO SAME DENSITY AS SURROUNDING SOIL.
2. HEAD TO BE FLUSH WITH CURB, PAVING OR HEADER AND VERTICAL OR PERP. TO FINISHED GRADE.

## 9 POP-UP SHRUB SPRAY – RCW
SCALE: 3" = 1'

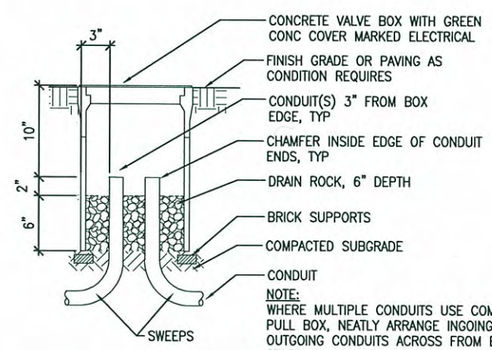


NOTE:
WHERE MULTIPLE CONDUITS USE COMMON PULL BOX, NEATLY ARRANGE INGOING AND OUTGOING CONDUITS ACROSS FROM EACH OTHER.

## 6 PULLBOX (SURFACE MOUNT)
SCALE: 1 1/2" = 1'

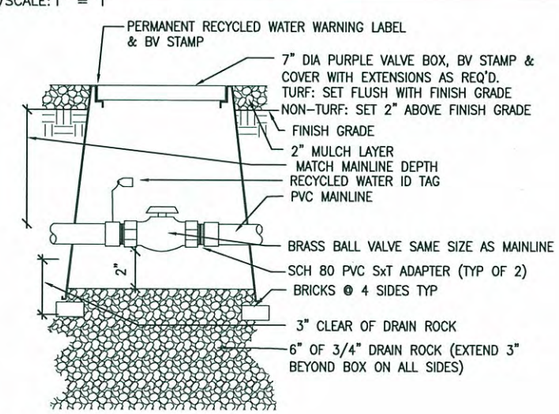


## 3 BALL VALVE – RCW
SCALE: 3" = 1'


CARDUCCI & ASSOCIATES, INC.
LANDSCAPE ARCHITECTURE PLANNING IRRIGATION DESIGN URBAN DESIGN
555 BEACH STREET, 4TH FLOOR
SAN FRANCISCO, CALIFORNIA 94133
PHONE (415) 674-0990
FAX (415) 674-0999



© 2009 CARDUCCI & ASSOCIATES, INC.


If the contractor encounters errors or discrepancies on the drawings, or site conditions which prevent or delay the completion of work as indicated, the contractor shall notify the owner and landscape architect by the time of bid of all such errors, discrepancies and omissions. The contractor shall indemnify and hold the landscape architect and the owner harmless if after contracting for the work he has monetary damage because of site conditions, errors, discrepancies or omissions at the time of bid

LICENSED LANDSCAPE ARCHITECT No. 2554 VINCENT P. LAY III STATE OF CALIFORNIA
8/31/11 Expiration Date
12/23/09 Date


Only the original, signed hard copy of this drawing constitutes Carducci & Associates professional work product, electronic copies do not. Carducci & Associates will not be responsible for any modifications made to this drawing electronic or otherwise that is not signed by Carducci & Associates.


MOUNTAIN VIEW FIRE STATION #5

2195 N. SHORELINE BLVD.
MOUNTAIN VIEW, CA

DATE: 12. 23. 09

REVISIONS:

PERMIT SET

SHEET TITLE:

IRRIGATION DETAILS

DRAWN BY:
CHECKED BY:
JOB NO:

SHEET
L3.05

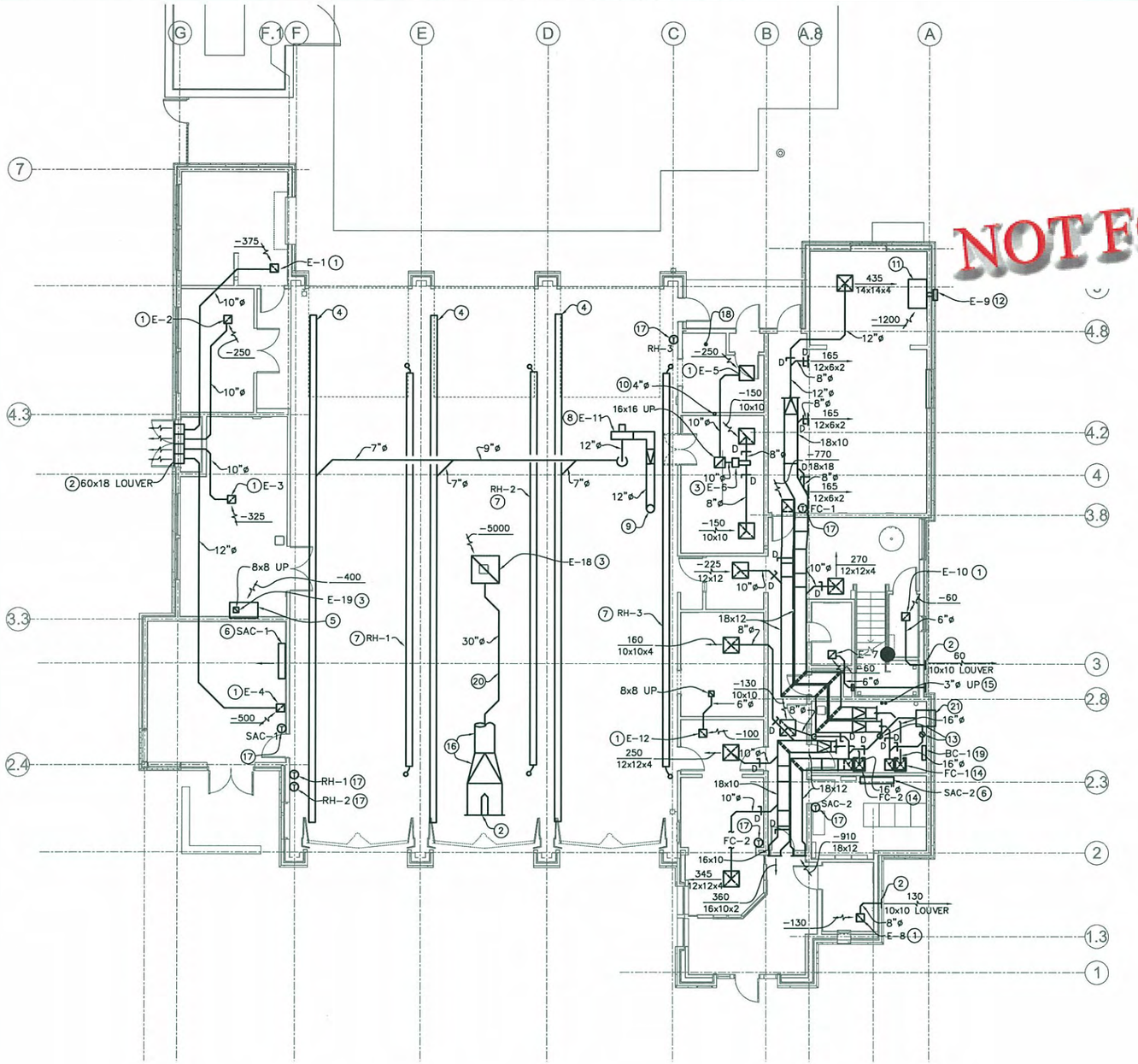


1 FIRST FLOOR MECHANICAL PLAN

SCALE: 1/8"=1'-0"

## Sheet Notes

NOT FOR CONSTRUCTION

6. INSTALL HIGH WALL FAN COIL. CONNECT REFRIGERANT PIPING.
7. INSTALL RADIANT TUBE HEATER. SEE DETAIL 4/M1.1.
8. INSTALL TAILPIPE EXHAUST FAN AS HIGH AS POSSIBLE ABOVE FLOOR. SEE DETAIL 5/M1.1.
9. INSTALL DUCT THROUGH ROOF. SEE DETAIL 5/M1.1.
10. INSTALL 3"x4" DRYER VENT IN WALL. INSTALL 4"ø COLLAR FOR DRYER CONNECTION. VERIFY LOCATION PRIOR TO ROUGH IN. INSTALL 4"ø VENT THROUGH ROOF. SEE DETAIL 1/M1.1.
11. INSTALL KITCHEN HOOD.
12. INSTALL WALL MOUNTED KITCHEN EXHAUST FAN.
13. INSTALL NORMALLY CLOSED MOTORIZED TWO POSITION OUTSIDE AIR DAMPER.
14. INSTALL FAN COIL. SEE DETAIL 6/M1.1. CONNECT REFRIGERANT PIPING.
15. CONNECT PVC WATER HEATER FLUE AND INTAKE TO WATER HEATER. INSTALL PVC UP IN CHASE. SEE M2.2 FOR CONTINUATION.
16. INSTALL OFFSETS, TRANSITION, AND "PANTS" FITTING TO CONNECT TO LOUVER.
17. INSTALL THERMOSTAT 48" ABOVE FLOOR.
18. INSTALL DRYER VENT THROUGH ROOF.
19. INSTALL REFRIGERANT CONTROLLER ON WALL.
20. COORDINATE DUCT ROUTING WITH TRUSS CONFIGURATION.
21. CONNECT OA DUCTS TO LOUVER THROUGH GALVANIZED PLENUM.

REGISTERED PROFESSIONAL ENGINEER
MICHAEL J. LEFLER
Exp. 12-31-11
No. 22,208
MECHANICAL
STATE OF CALIFORNIA


LEFLER ENGINEERING, INC.
1651 Second Street
San Rafael, CA 94901
(415) 456-4220
(415) 456-1248 fax


MOUNTAIN VIEW
FIRE STATION #5

2195 N. SHORELINE BLVD
MOUNTAIN VIEW, CA

DATE: 12 . 23 . 09

REVISIONS:

PERMIT SET

SHEET TITLE:

FIRST FLOOR MECHANICAL PLAN

DRAWN BY:
CHECKED BY:
JOB NO: 20808.00

SHEET M2.1

Plot Date: December 22, 2009 - 10:24 am
File Name: Z:\Jobfiles\Mountain View Fire Station #5\M21_M22_M23_P21dwg
date file

PIN#- 7779-1_M2.1

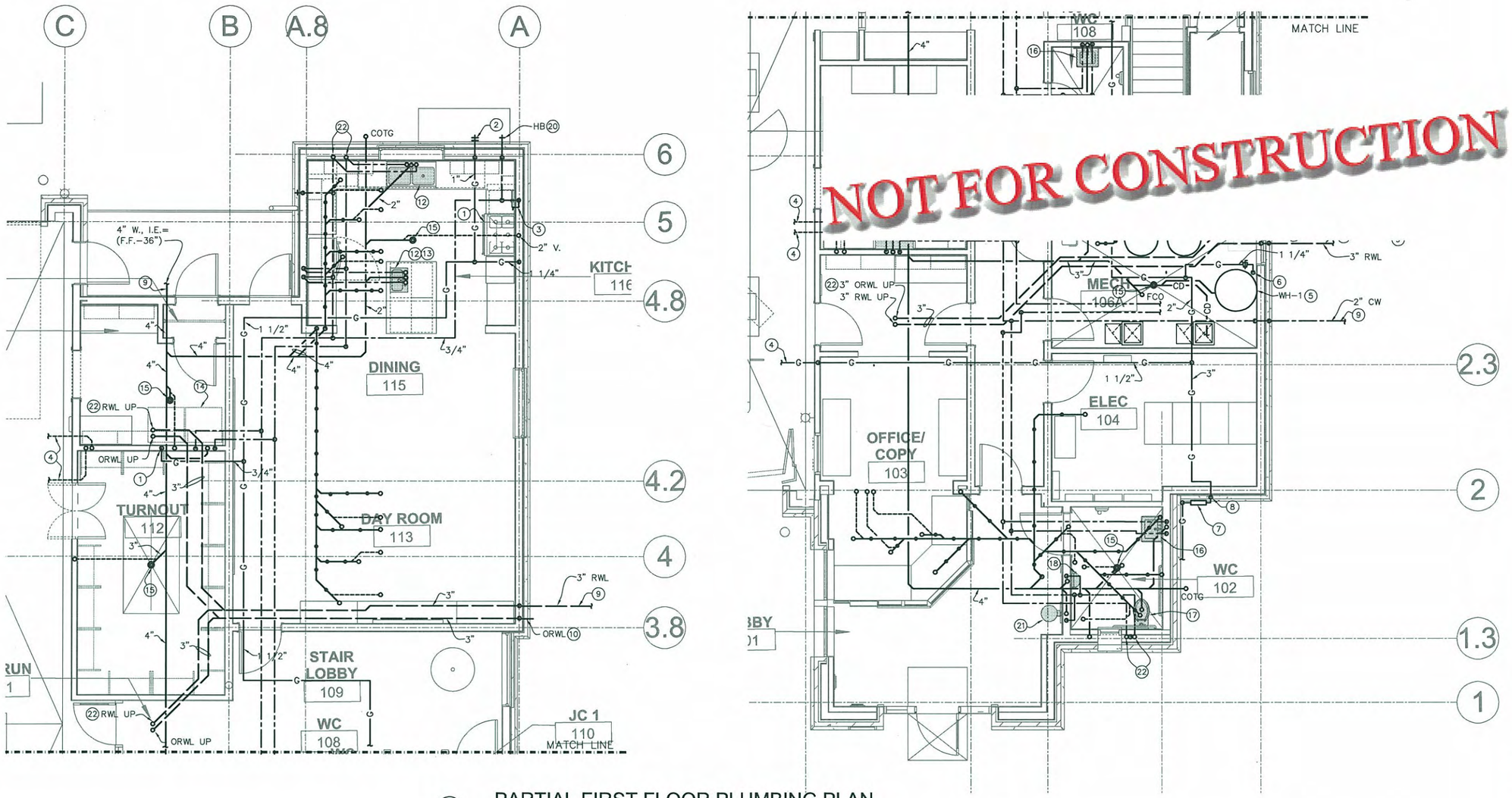


NOT FOR CONSTRUCTION

1 PARTIAL FIRST FLOOR PLUMBING PLAN

SCALE: 1/4"=1'-0"

## Sheet Notes

1. APPLIANCE. CONNECT GAS PIPING THROUGH GAS COCK AND APPROVED FLEXIBLE CONNECTION.
2. INSTALL GAS QUICK-CONNECT FITTING FOR CONNECTION TO GRILLE. VERIFY LOCATION PRIOR TO ROUGH IN.
3. INSTALL POT-FILLER FAUCET ON WALL ABOVE STOVE.
4. SEE P2.1 FOR CONTINUATION, TYPICAL.
5. INSTALL WATER HEATER. SEE DETAIL 3/P1.1.
6. CONNECT GAS PIPING THROUGH GAS COCK, UNION AND DRIP LEG.
7. GAS METER. COORDINATE WITH SERVICE PROVIDER. SIZE METER FOR 900,000 BTUH.
8. INSTALL SEISMIC SHUT OFF VALVE IN GAS PIPING.
9. SEE CIVIL PLANS FOR CONTINUATION.
10. DISCHARGE ORWL 8'-0" ABOVE GRADE.
11. INSTALL FS RISER. SEE DETAIL 1/P1.2.
12. INSTALL SK. CONNECT 2" W., 1 1/2" V., 1/2" CW, AND 1/2" HW.
13. INSTALL "ISLAND" VENT.
14. WASHING MACHINE. INSTALL RECESSED WALL BOX. CONNECT 2" W., 1 1/2" V., 1/2" CW, AND 1/2" HW.
15. INSTALL FD. CONNECT 3" W., 2" V., AND 1/2" CW FROM TRAP PRIMER.
16. INSTALL LAV. CONNECT 2" W., 1 1/2" V., 1/2" CW, AND 1/2" HW.
17. INSTALL WC. CONNECT 4" W., 2" V., AND 1" CW.
18. INSTALL UR. CONNECT 2" W., 1 1/2" V., AND 3/4" CW.
19. INSTALL SSK. CONNECT 3" W., 2" V., 1/2" CW, AND 1/2" HW.
20. INSTALL HB WITH NON-REMOVABLE VACUUM BREAKER. CONNECT 1/2" CW.
21. INSTALL DF. CONNECT 2" W., 1 1/2" V., AND 1/2" CW.
22. SEE P3.2 FOR CONTINUATION UP, TYPICAL.
23. SOLAR HOT WATER STORAGE TANKS. SEE DRAWINGS BY SOLAR PROVIDER. COORDINATE CONNECTIONS TO DOMESTIC HOT WATER.

REGISTERED PROFESSIONAL ENGINEER MICHAEL J. LEFLER Exp. 12-31-11 No. 22,208 MECHANICAL STATE OF CALIFORNIA


LEFLER ENGINEERING, INC.
1651 Second Street
San Rafael, CA 94901
(415) 456-4220
(415) 456-1248 fax


MOUNTAIN VIEW FIRE STATION #5

2195 N. SHORELINE BLVD
MOUNTAIN VIEW, CA

DATE: 12 . 23 . 09

REVISIONS:

PERMIT SET

SHEET TITLE:

PARTIAL FIRST FLOOR PLUMBING PLAN

DRAWN BY:

CHECKED BY:

JOB NO: 20808.00

SHEET P3.1

PIN#- 7779-1_P3.1

Plot Date: December 22, 2009 - 1026 am
File Name: Z:\Jobfiles\Mountain View Fire Station #5\P31_P32.dwg
date file

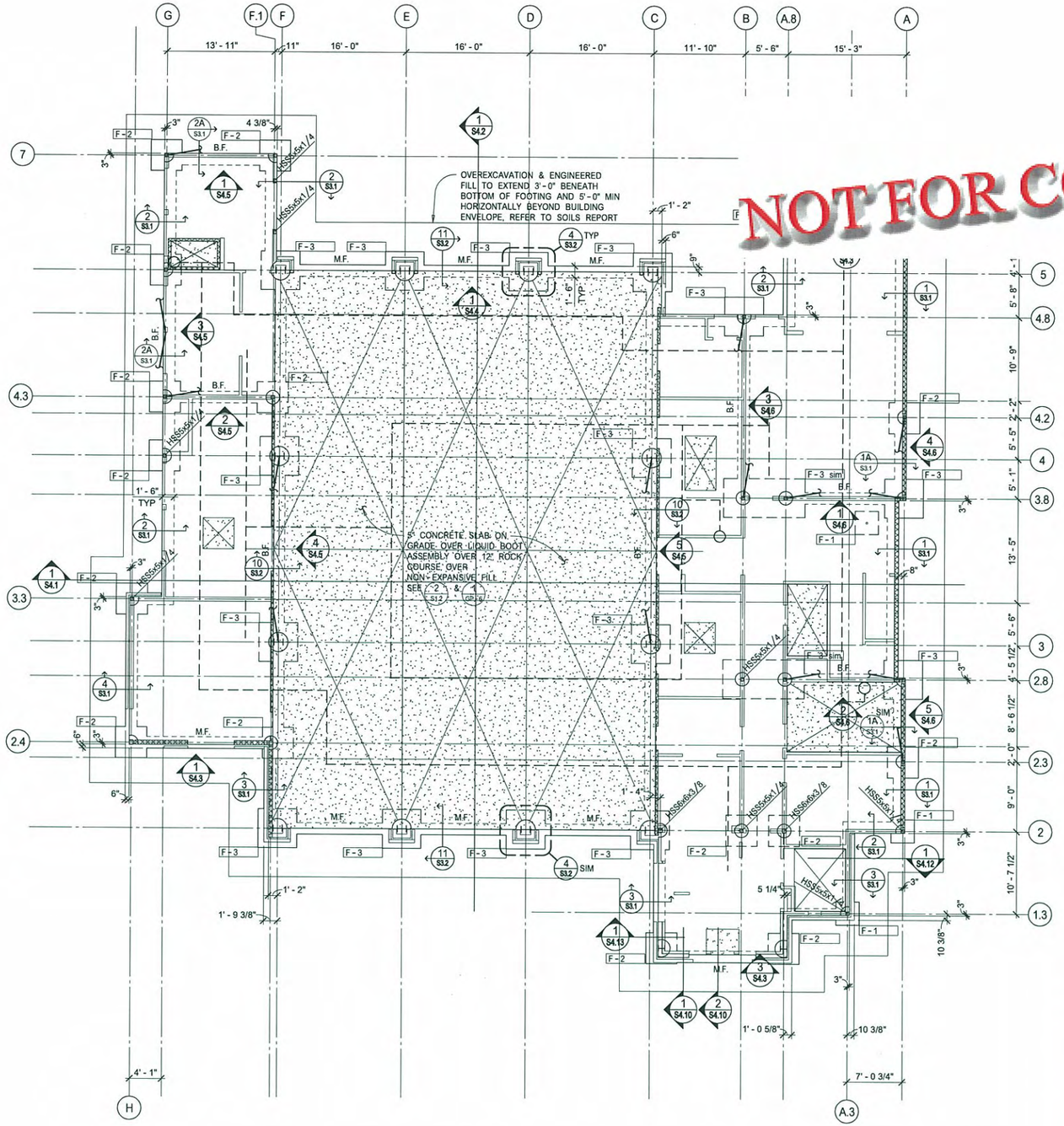


FOUNDATION PLAN

SCALE: 1/8" = 1'-0" | KPFF K0000 | 1 | S2.1

NORTH

NOTES:

1. FOR GENERAL NOTES REFER TO SHEET S1.1
   FOR TYPICAL DETAILS REFER TO SHEET S1.2
   FOR FOUNDATION DETAILS REFER TO SHEET S3.1
2. VERIFY ALL DIMENSIONS, ELEVATIONS, FINISH SURFACES, SLOPES, DRAINS, SLAB DEPRESSIONS, ETC., WITH ARCHITECTURAL DRAWINGS, PRIOR TO START OF CONSTRUCTION.

NOT FOR CONSTRUCTION

8. F-1 ← INDICATES FOOTING TYPE, SEE 4/S3.1
9. ' S.J. ' INDICATES SHRINKAGE JOINT IN S.O.G., SEE 3/S1.2
   ' W.P.J. ' INDICATES WEAKENED PLANE JOINT IN S.O.G., SEE 3/S1.2
10. FOR S.O.G. BLOCKOUT AT COLUMNS AND WALLS, SEE 4/S1.2
11. REFER TO THE SOILS REPORT & SHEETS GP-1 THRU GP-7 FOR SUBGRADE PREPARATION AND VENT PIPE REQUIREMENTS.

| MARK | WIDTH 'W' | LENGTH 'L' | DEPTH 'D' | REINFORCING | DETAIL | REMARKS |
|---|---|---|---|---|---|---|
| F-1 | 3'-0" | 3'-0" | 2-0 | 3-#5 BOT E.W. | | |
| F-2 | 4'-0" | 4'-0" | 2'-0" | 4-#5 BOT E.W. | | |
| F-3 | 5'-0" | 5'-0" | 2'-0" | 6-#5 T&B E.W. | | |
| F-4 | 4'-0" | 4'-0" | 2'-0" | 4-#5 T&B E.W. | | |

NOTES:

FOOTING SCHEDULE

SCALE: 3/4" = 1'-0" | KPFF K0000 | 2 | S2.1


kpff
Consulting Engineers
221 Main Street, Suite 800
San Francisco, California 94105
T: 415.989.1004 F: 415.989.1552
www.kpff.com ftp.kpff-sf.com


MOUNTAIN VIEW FIRE STATION #5

2195 N SHORELINE BLVD
MOUNTAIN VIEW, CA

Date 12 . 23 . 09

PERMIT SET

Sheet Title:
FOUNDATION PLAN

Drawn By: Author
Checked By: Checker
Job Number: K108190

Sheet S2.1

PIN #-7779-1_S2.1

NOTES:

1. FOR GENERAL NOTES REFER TO SHEET S1.1
   FOR TYPICAL DETAILS REFER TO SHEET S1.2
   FOR ROOF FRAMING DETAILS REFER TO SHEET S7.1 THRU S7.3
2. VERIFY ALL DIMENSIONS, ELEVATIONS, FINISH SURFACES, SLOPES, CRICKETS, DRAINS, ETC., WITH ARCHITECTURAL DRAWINGS, PRIOR TO START OF CONSTRUCTION.

NOT FOR CONSTRUCTION

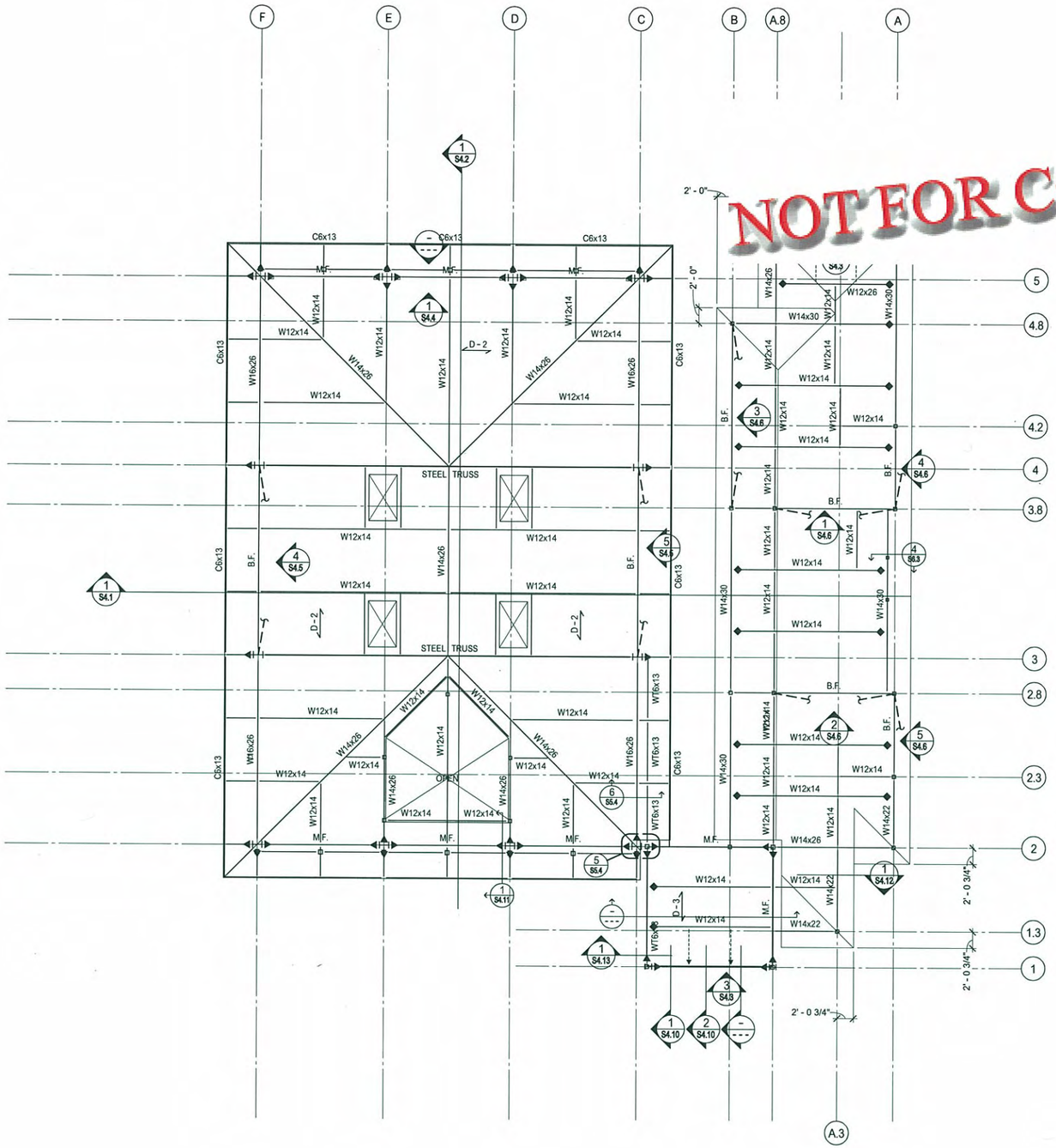


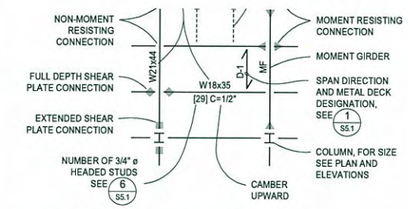


8. FOR COLUMN SIZES, SEE PLANS & ELEVATIONS
9. FOR TYPICAL BEAM AND GIRDER CONNECTIONS, SEE SHEET S5.3
10. FOR TYPICAL METAL DECK DETAILS, SEE SHEET S5.1
11. FOR EDGE OF METAL DECK AT INTERIOR OPENINGS, S.A.D.
12. FOR SKYLIGHT DETAILS, S.A.D.

ROOF FRAMING PLAN

SCALE: 1/8" = 1'-0"

1 S2.3

NORTH


kpff
Consulting Engineers
221 Main Street, Suite 800
San Francisco, California 94105
T: 415.989.1004 F: 415.989.1552
www.kpff.com ftp.kpff-sf.com


MOUNTAIN VIEW FIRE STATION #5

2195 N SHORELINE BLVD
MOUNTAIN VIEW, CA

Date 12 . 23 . 09

PERMIT SET

Sheet Title:
ROOF FRAMING PLAN

Drawn By: Author
Checked By: Checker
Job Number: K108190

Sheet S2.3

PIN #-7779-1_S2.3

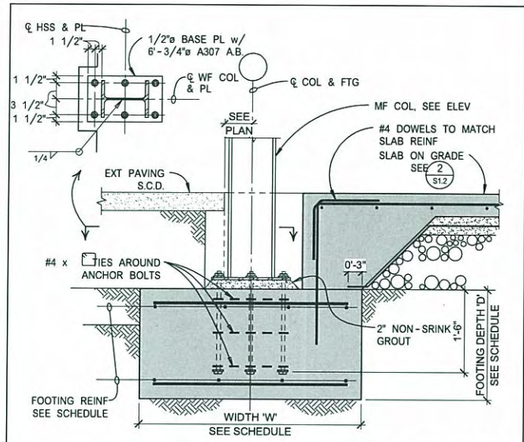


FOOTING DETAIL — SCALE: 3/4" = 1'-0" — KPFF K0000 — 1 S3.2

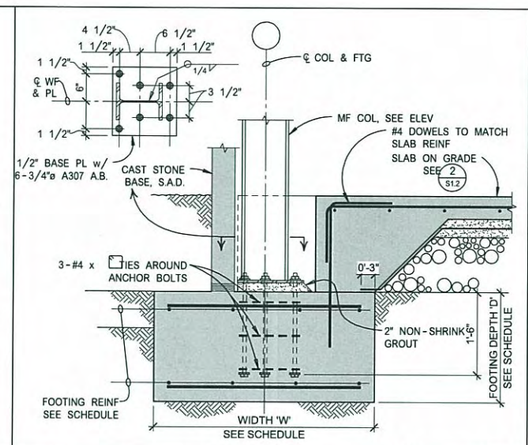


FOOTING DETAIL — SCALE: 3/4" = 1'-0" — KPFF K0000 — 2 S3.2

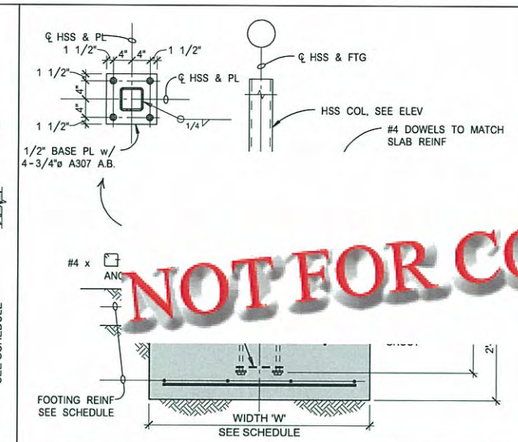


FOOTING DETAIL — SCALE: 3/4" = 1'-0" — KPFF K0000 — 3 S3.2

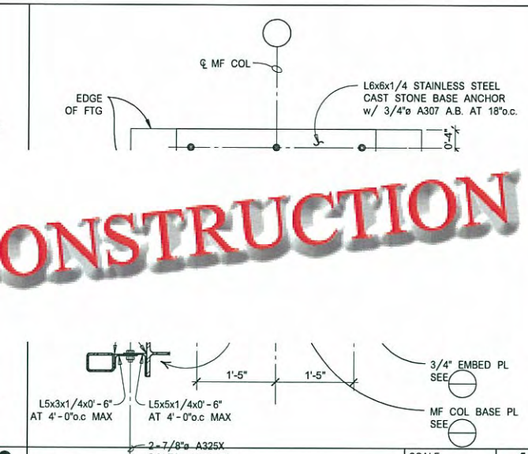


DETAIL — SCALE: 3/4" = 1'-0" — KPFF K0000 — 4 S3.2

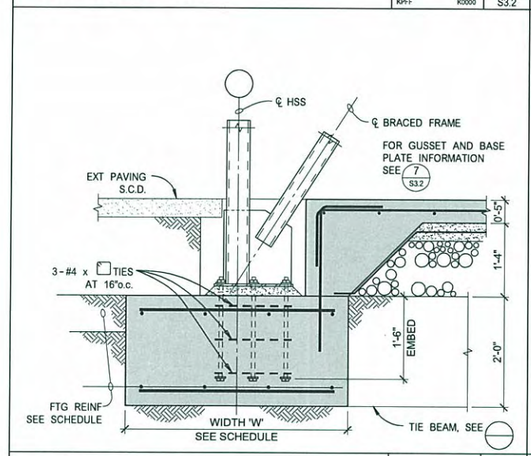


FOOTING DETAIL — SCALE: 3/4" = 1'-0" — KPFF K0000 — 5 S3.2

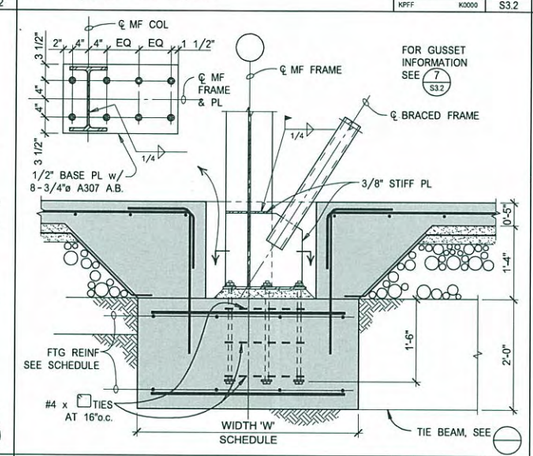


FOOTING DETAIL — SCALE: 3/4" = 1'-0" — KPFF K0000 — 6 S3.2

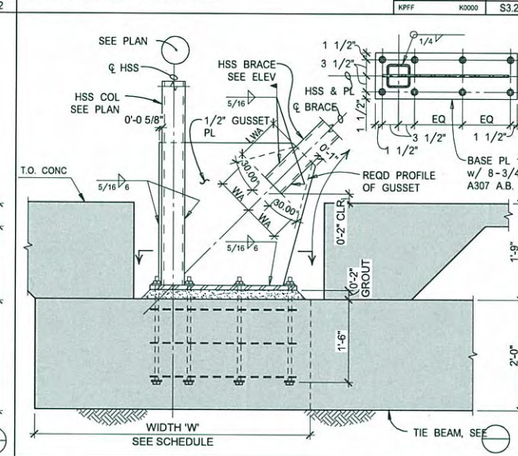


FOOTING DETAIL — SCALE: 3/4" = 1'-0" — KPFF K0000 — 7 S3.2

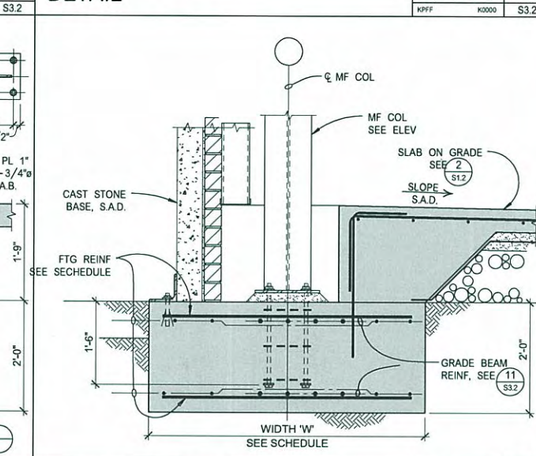


FOOTING DETAIL — SCALE: 3/4" = 1'-0" — KPFF K0000 — 8 S3.2

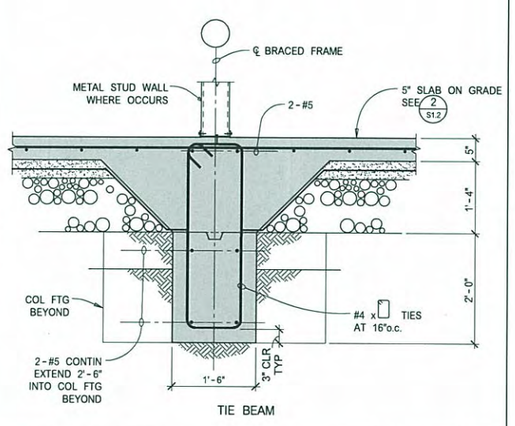


FOOTING DETAIL — SCALE: 3/4" = 1'-0" — KPFF K0000 — 9 S3.2

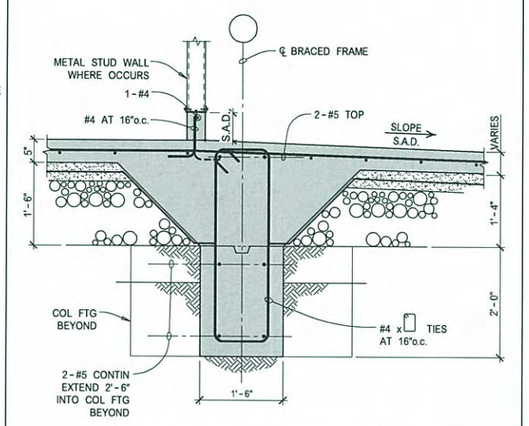


FOOTING DETAIL — SCALE: 3/4" = 1'-0" — KPFF K0000 — 10 S3.2

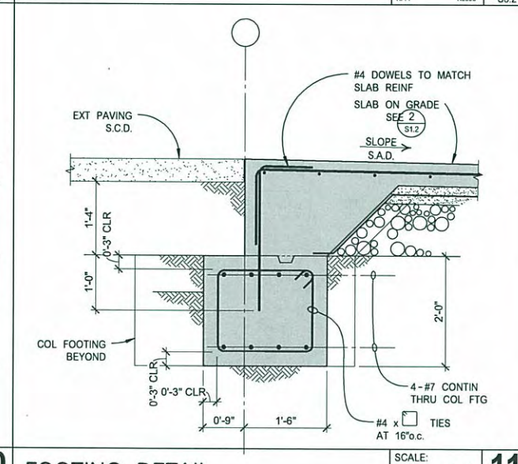


FOOTING DETAIL — SCALE: 3/4" = 1'-0" — KPFF K0000 — 11 S3.2

NOT FOR CONSTRUCTION


kpff
Consulting Engineers
221 Main Street, Suite 800
San Francisco, California 94105
T: 415.989.1004 F: 415.989.1552
www.kpff.com ftp.kpff-sf.com


# MOUNTAIN VIEW FIRE STATION #5

2195 N SHORELINE BLVD
MOUNTAIN VIEW, CA

Date 12.23.09

PERMIT SET

Sheet Title:
FOUNDATION DETAILS

Drawn By: Author
Checked By: Checker
Job Number: K108190

Sheet S3.2

D:\108190-001\108190-00-MVFS-Struc.rvt

12/22/2009 11:31:50 AM

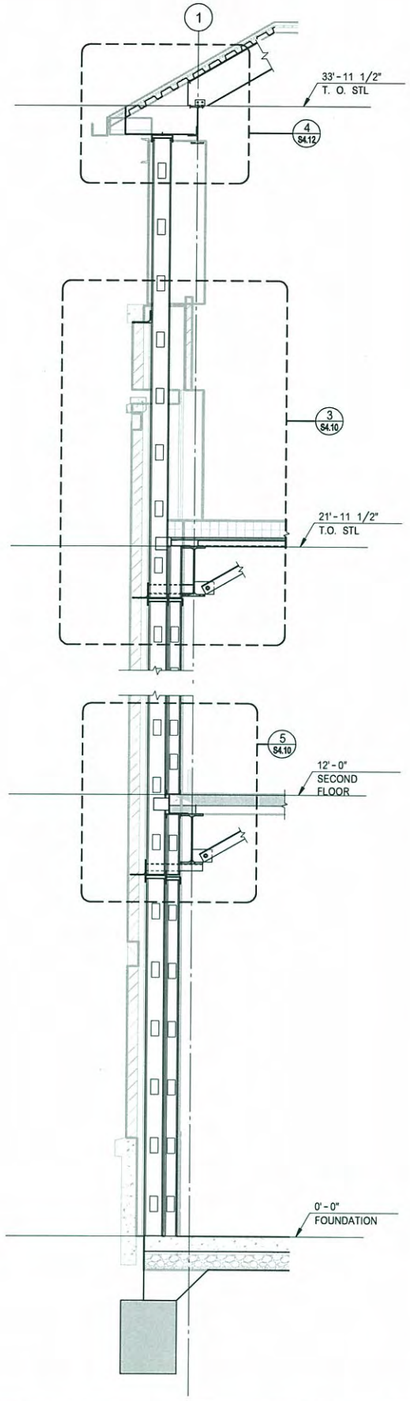


WALL SECTION — SCALE: 1/2" = 1'-0" — KPFF K0000 — 1 / S4.10

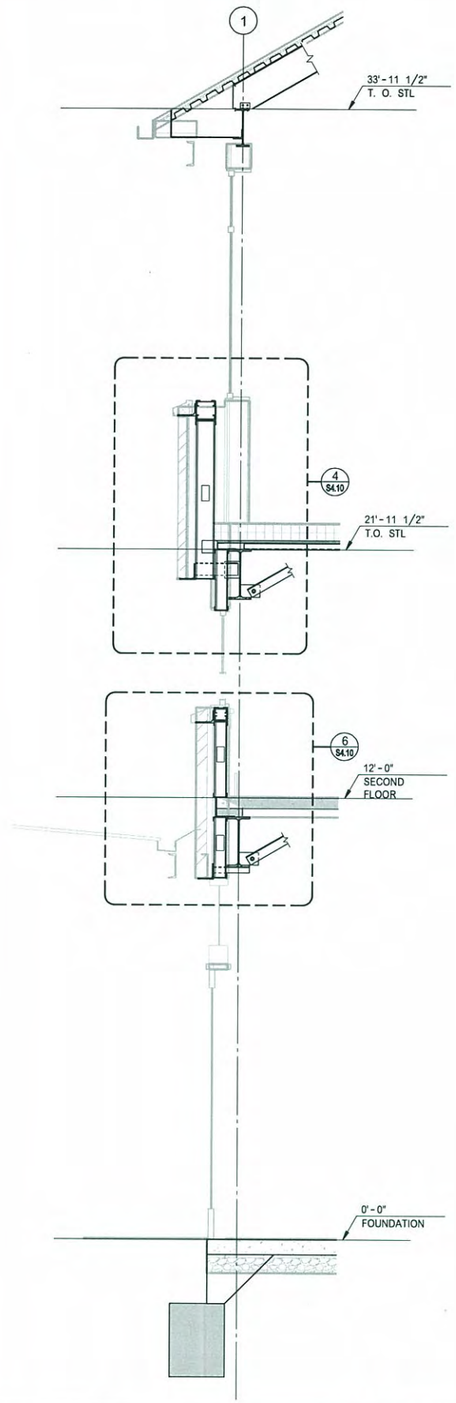


WALL SECTION — SCALE: 1/2" = 1'-0" — KPFF K0000 — 2 / S4.10

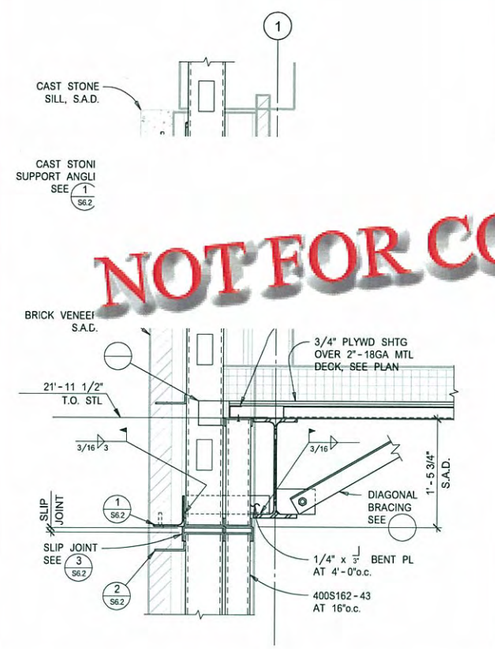


DETAIL — SCALE: 1" = 1'-0" — KPFF K0000 — 3 / S4.10

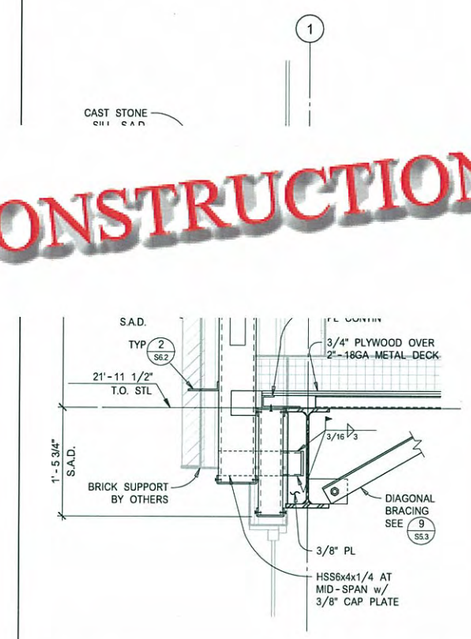


DETAIL — SCALE: 1" = 1'-0" — KPFF K0000 — 4 / S4.10

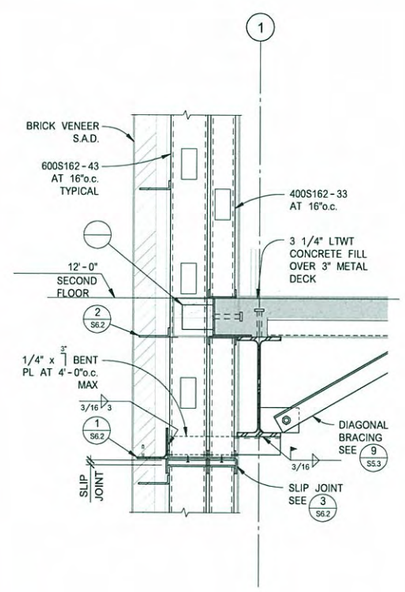


DETAIL — SCALE: 1" = 1'-0" — KPFF K0000 — 5 / S4.10

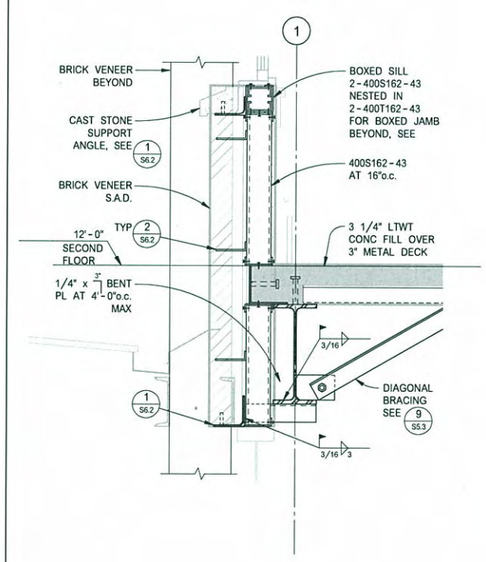


DETAIL — SCALE: 1" = 1'-0" — KPFF K0000 — 6 / S4.10


kpff
Consulting Engineers
221 Main Street, Suite 800
San Francisco, California 94105
T: 415.989.1004 F: 415.989.1552
www.kpff.com ftp.kpff-sf.com


MOUNTAIN VIEW
FIRE STATION #5

2195 N SHORELINE BLVD
MOUNTAIN VIEW, CA

Date 12.23.09

PERMIT SET

Sheet Title:
WALL SECTIONS & DETAILS

Drawn By: Author
Checked By: Checker
Job Number: K108190

Sheet S4.10

PIN #-7779-1_S4.10

NOT FOR CONSTRUCTION

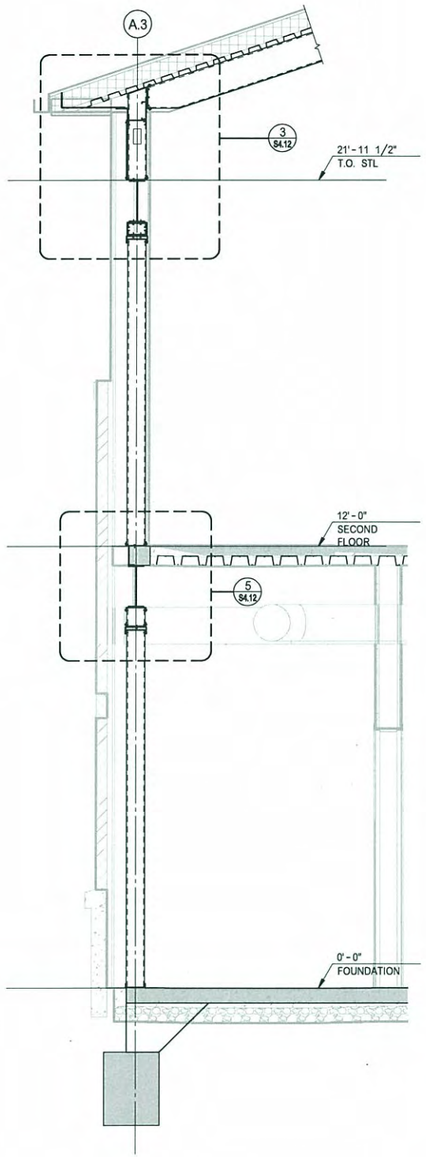


WALL SECTION — SCALE: 1/2" = 1'-0" — KPFF K0000 — 1 — S4.12

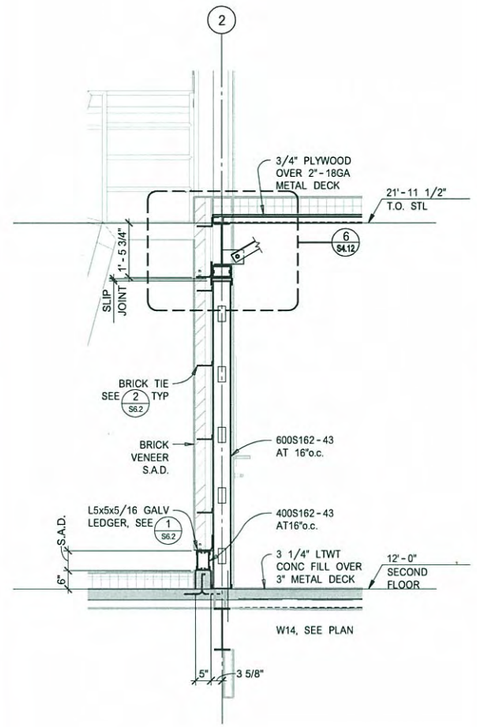


WALL SECTION — SCALE: 1/2" = 1'-0" — KPFF K0000 — 2 — S4.12

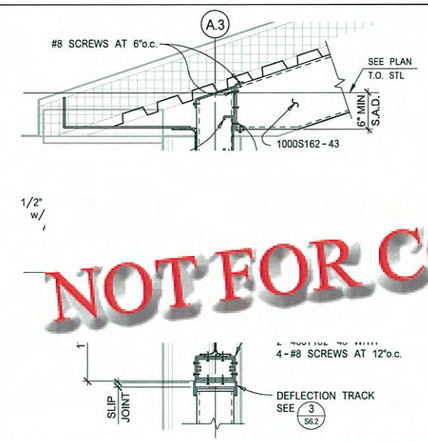


DETAIL — SCALE: 1" = 1'-0" — KPFF K0000 — 3 — S4.12

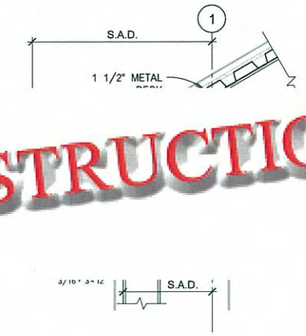


SECTION — SCALE: 1" = 1'-0" — KPFF K0000 — 4 — S4.12

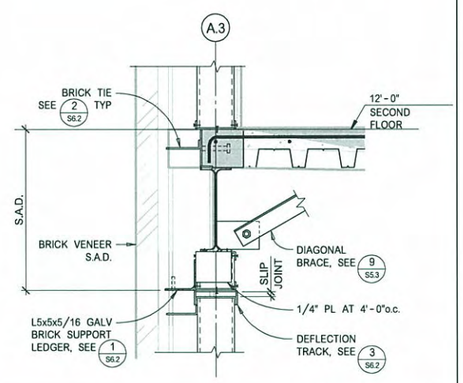


DETAIL — SCALE: 1" = 1'-0" — KPFF K0000 — 5 — S4.12

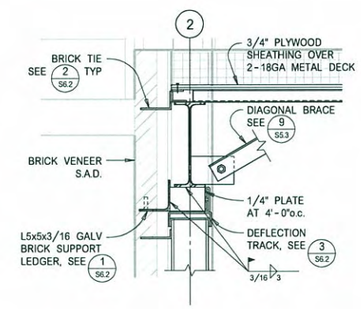


DETAIL — SCALE: 1" = 1'-0" — KPFF K0000 — 6 — S4.12

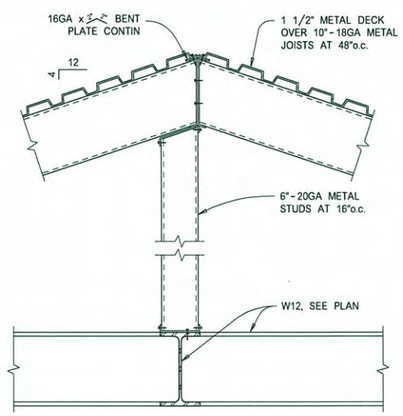


BEAM TO COLUMN WEB — SCALE: 1" = 1'-0" — KPFF K0000 — 7 — S4.12

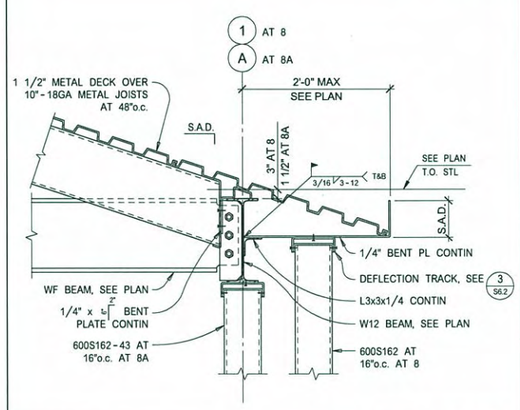


SECTION — SCALE: 1" = 1'-0" — KPFF K0000 — 8 — 8A — S4.12

NOT FOR CONSTRUCTION


kpff
Consulting Engineers
221 Main Street, Suite 800
San Francisco, California 94105
T: 415.989.1004 F: 415.989.1552
www.kpff.com ftp.kpff-sf.com


MOUNTAIN VIEW
FIRE STATION #5

2195 N SHORELINE BLVD
MOUNTAIN VIEW, CA

Date 12 . 23 . 09

PERMIT
SET

Sheet Title:
WALL
SECTIONS &
DETAILS

Drawn By: Author
Checked By: Checker
Job Number: K108190

Sheet
S4.12

PIN #-7779-1_S4.12

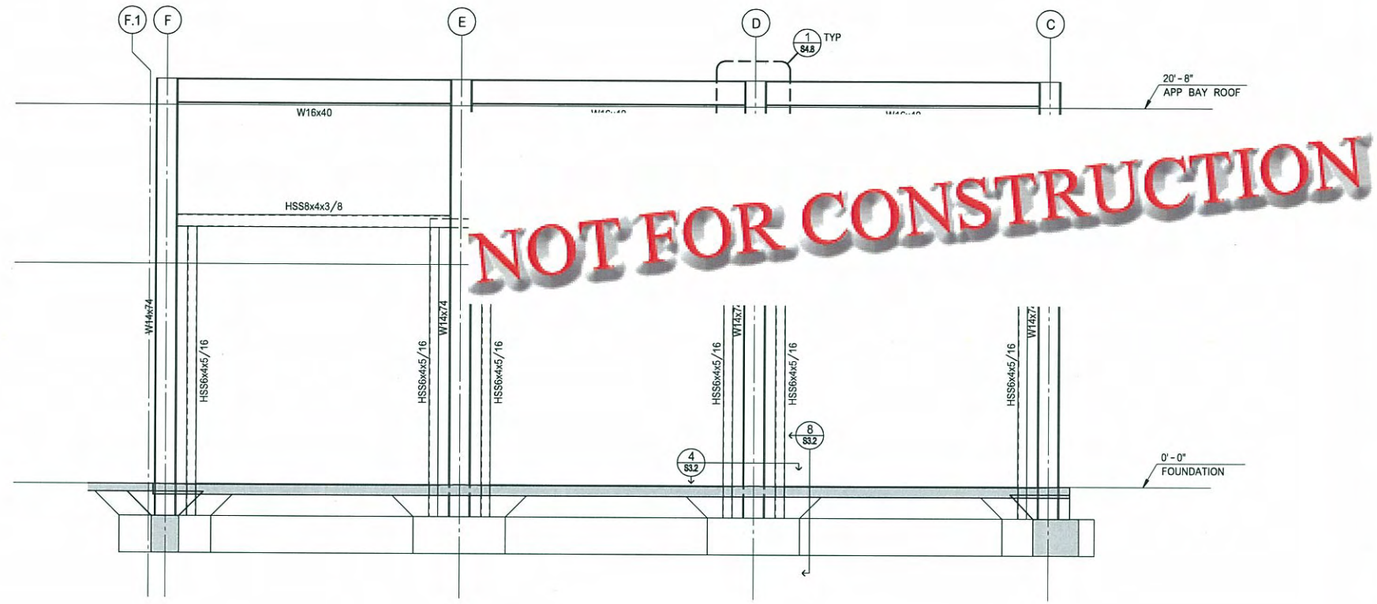


NOT FOR CONSTRUCTION

MOMENT FRAME ELEVATION | SCALE: 1/4" = 1'-0" | KPFF K0000 | 1 | S4.4

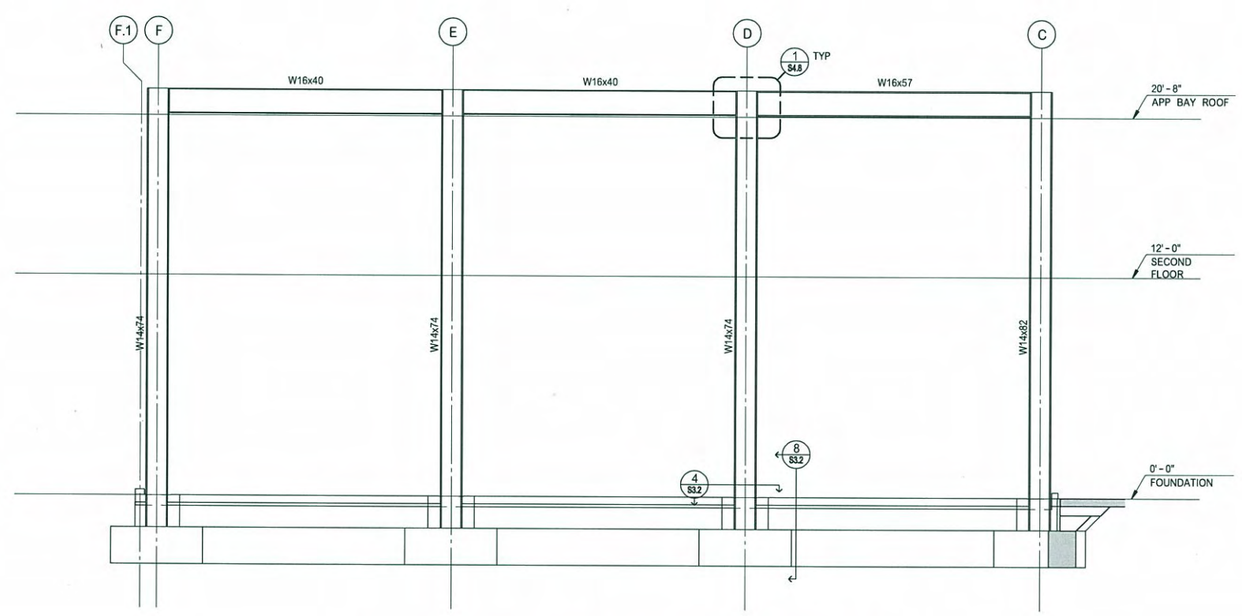


MOMENT FRAME ELEVATION | SCALE: 1/4" = 1'-0" | KPFF K0000 | 2 | S4.4


kpff
Consulting Engineers
221 Main Street, Suite 800
San Francisco, California 94105
T: 415.989.1004 F: 415.989.1552
www.kpff.com ftp.kpff-sf.com


MOUNTAIN VIEW
FIRE STATION #5

2195 N SHORELINE BLVD
MOUNTAIN VIEW, CA

Date 12 . 23 . 09

PERMIT
SET

Sheet Title:
MOMENT
FRAME
ELEVATIONS

Drawn By: Author
Checked By: Checker
Job Number: K108190

Sheet
S4.4

PIN #-7779-1_S4.4

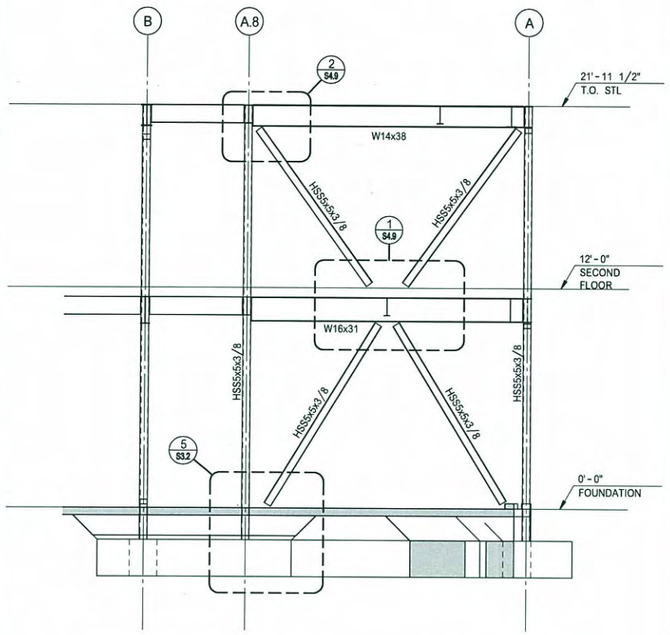


BRACED FRAME ELEVATION | SCALE: 1/4" = 1'-0" | KPFF K0000 | 1 | S4.6

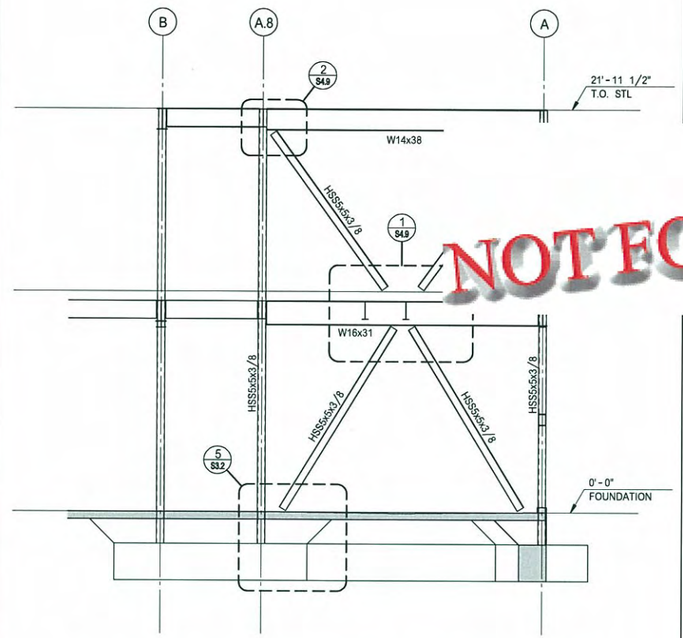


BRACED FRAME ELEVATION | SCALE: 1/4" = 1'-0" | KPFF K0000 | 2 | S4.6

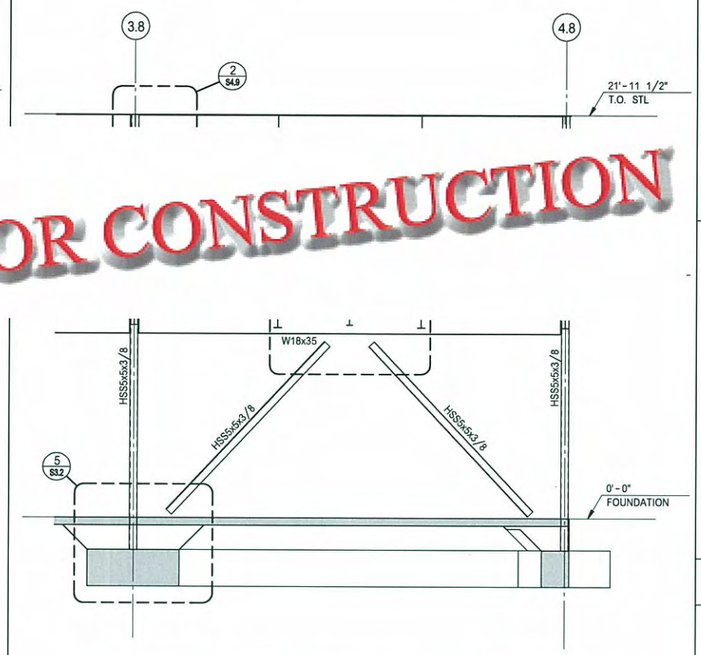


BRACED FRAME ELEVATION | SCALE: 1/4" = 1'-0" | KPFF K0000 | 3 | S4.6

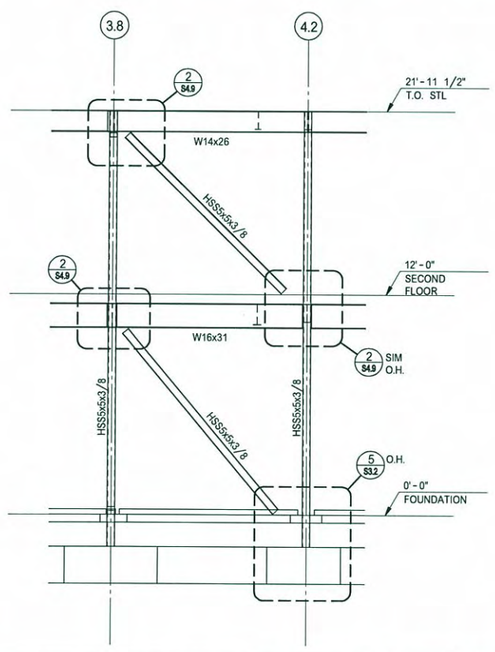


BRACED FRAME ELEVATION | SCALE: 1/4" = 1'-0" | KPFF K0000 | 4 | S4.6

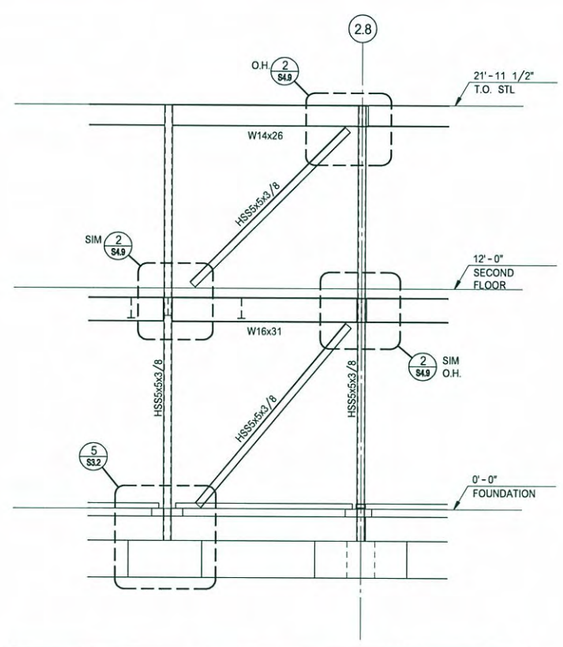


BRACED FRAME ELEVATION | SCALE: 1/4" = 1'-0" | KPFF K0000 | 5 | S4.6

NOT FOR CONSTRUCTION


kpff
Consulting Engineers
221 Main Street, Suite 800
San Francisco, California 94105
T: 415.989.1004 F: 415.989.1552
www.kpff.com ftp.kpff-sf.com


MOUNTAIN VIEW
FIRE STATION #5

2195 N SHORELINE BLVD
MOUNTAIN VIEW, CA

Date 12 . 23 . 09

PERMIT
SET

Sheet Title:
BRACED
FRAME
ELEVATION

Drawn By: Author
Checked By: Checker
Job Number: K108190

Sheet
S4.6

PIN #-7779-1_S4.6

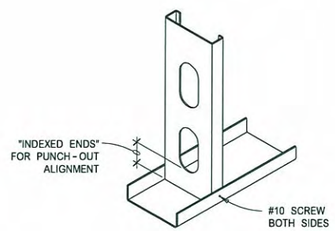


STUD TO TRACK - SCREW ATTACHMENT

DETAIL | SCALE: NONE | 1 | KPFF K6010 | S6.1

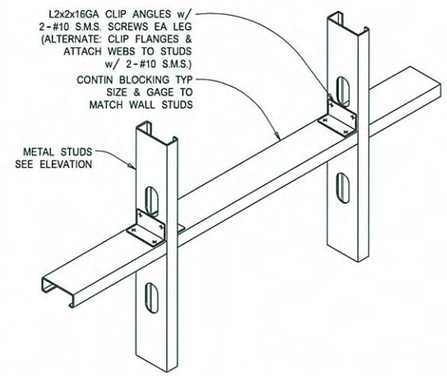


TYPICAL CONTINUOUS BLOCKING

DETAIL | SCALE: 1 1/2" = 1'-0" | 2 | KPFF K0000 | S6.1

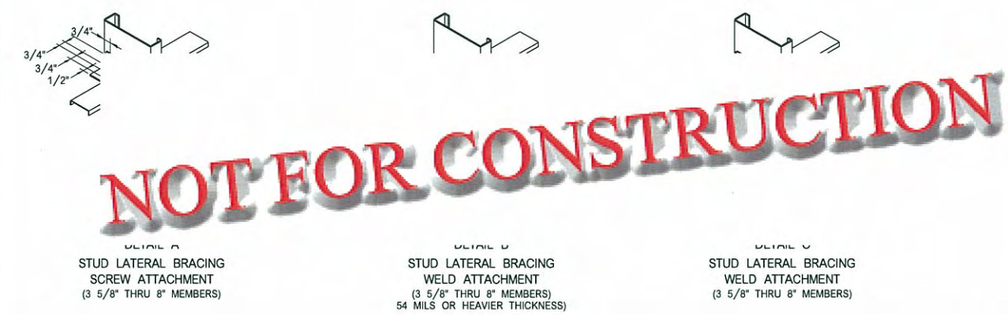


DETAILS | SCALE: NONE | 3 | KPFF K6140 | S6.1

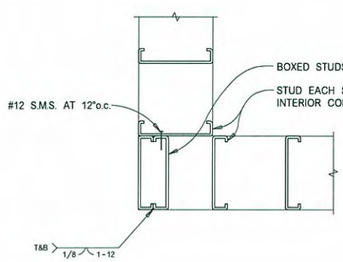


TYP CORNER CONDITION

PLAN DETAIL | SCALE: 1 1/2" = 1'-0" | 4 | KPFF K0000 | S6.1

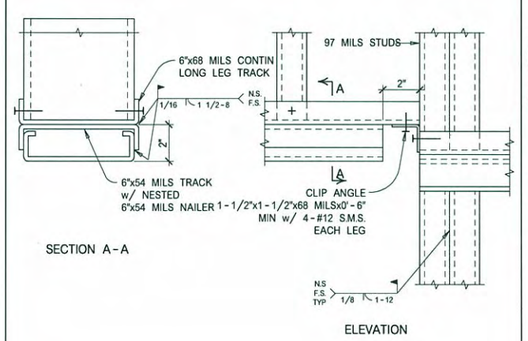


TRACK HEADER, 2ND LEVEL | SCALE: NONE | 5 | KPFF K0000 | S6.1

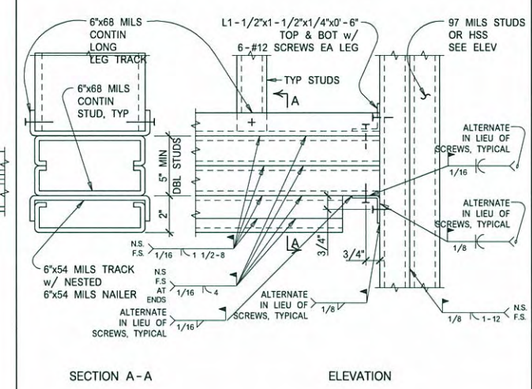


BOXED HEADER, 6'-0" MAX | SCALE: NONE | 6 | KPFF K0000 | S6.1

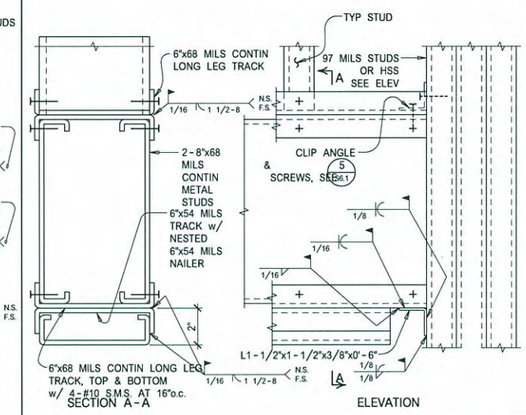


BUILT-UP HEADER, 12'-0" MAX | SCALE: NONE | 7 | KPFF K0000 | S6.1

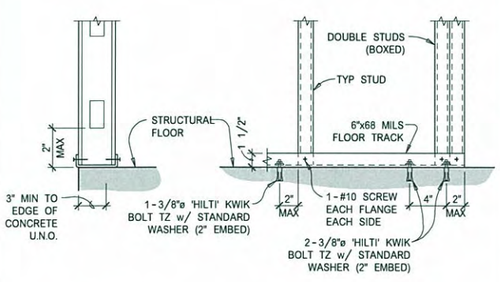


TYPICAL BOTTOM TRACK AND AT DOOR OPENINGS

BOTTOM TRACK | SCALE: NONE | 8 | KPFF K6120 | S6.1

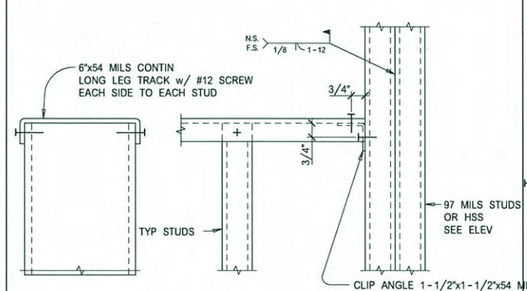


SINGLE TRACK SILL, 6'-0" MAX | SCALE: NONE | 9 | KPFF K0000 | S6.1

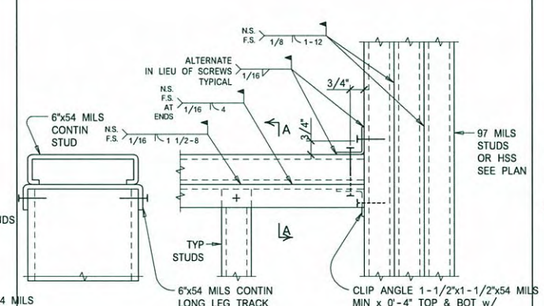


SINGLE STUD SILL, 6'-0" MAX | SCALE: NONE | 10 | KPFF K0000 | S6.1

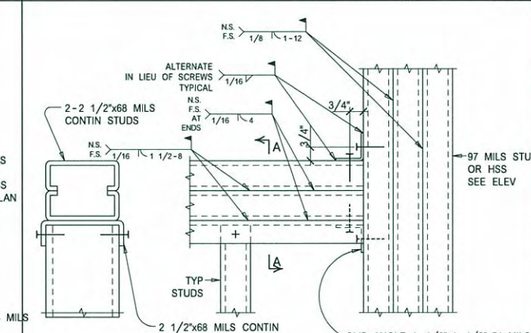


DBL STUD SILL, 12'-0" MAX | SCALE: NONE | 11 | KPFF K0000 | S6.1


kpff
Consulting Engineers
221 Main Street, Suite 800
San Francisco, California 94105
T: 415.989.1004 F: 415.989.1552
www.kpff.com ftp.kpff-sf.com


# MOUNTAIN VIEW FIRE STATION #5

2195 N SHORELINE BLVD
MOUNTAIN VIEW, CA

Date 12.23.09

PERMIT SET

Sheet Title:
EXTERIOR METAL STUD DETAILS

Drawn By: F.C./K.A.
Checked By: L.T.
Job Number: K108190

Sheet S6.1

D:\108190-001\108190-00-MVFS-Struc.rvt

12/22/2009 11:34:44 AM

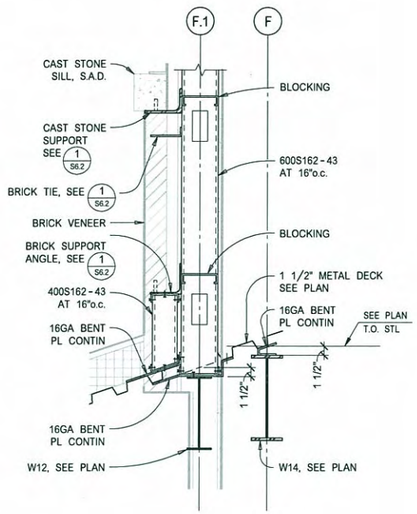


BETWEEN GRIDLINES 3.2 & 5

WALL SECTION — SCALE: 1" = 1'-0" — KPFF K0000 — 1 S7.1

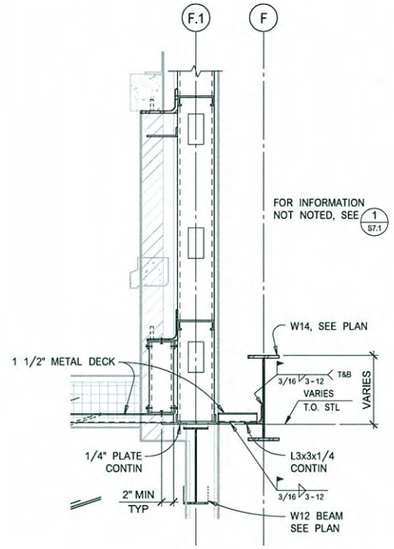


BETWEEN GRIDLINES 3 & 3.2

WALL SECTION — SCALE: 1" = 1'-0" — KPFF K0000 — 2 S7.1

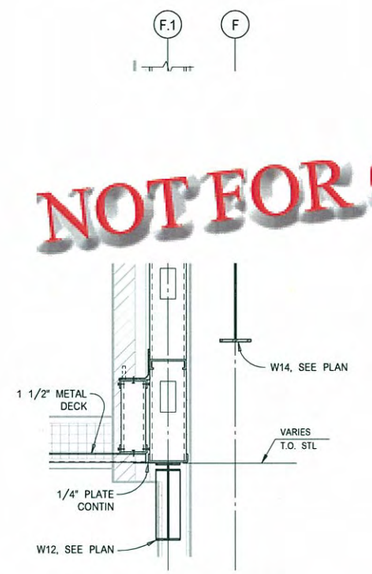


BETWEEN GRIDLINES 2.4 & 3

WALL SECTION — SCALE: 1" = 1'-0" — KPFF K0000 — 3 S7.1

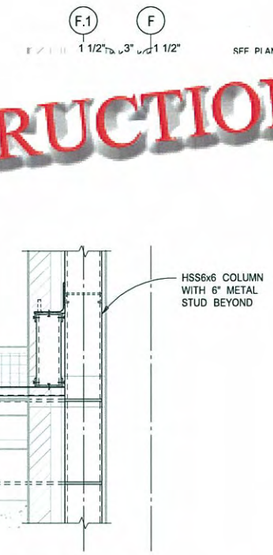


BETWEEN GRIDLINES F & 2.4

WALL SECTION — SCALE: 1" = 1'-0" — KPFF K0000 — 4 S7.1

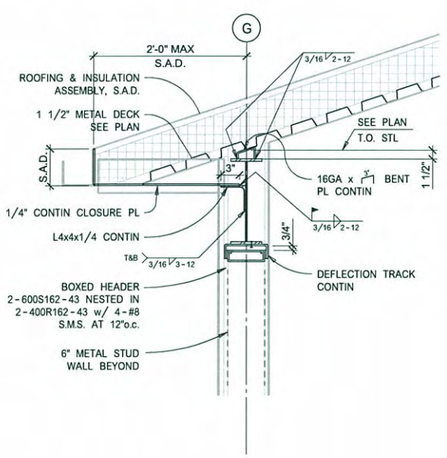


SECTION — SCALE: 1" = 1'-0" — KPFF K0000 — 5 S7.1

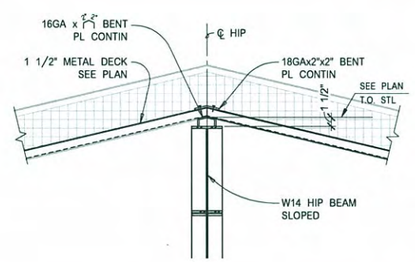


SECTION — SCALE: 1" = 1'-0" — KPFF K0000 — 6 S7.1

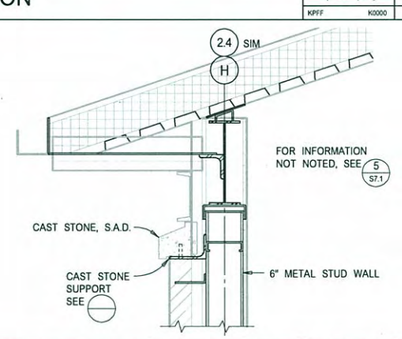


SECTION — SCALE: 1" = 1'-0" — KPFF K0000 — 7 S7.1

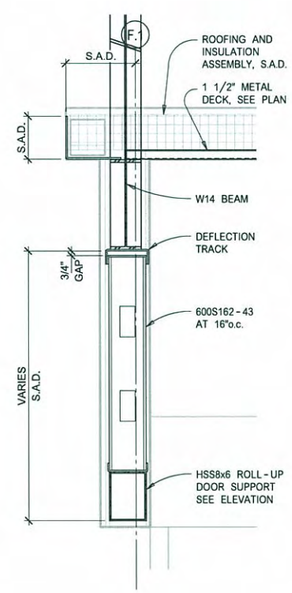


SECTION — SCALE: 1" = 1'-0" — KPFF K0000 — 8 S7.1

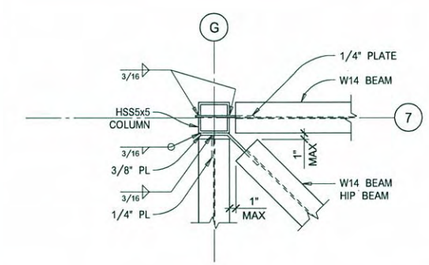


PLAN DETAIL — SCALE: 1" = 1'-0" — KPFF K0000 — 9 S7.1

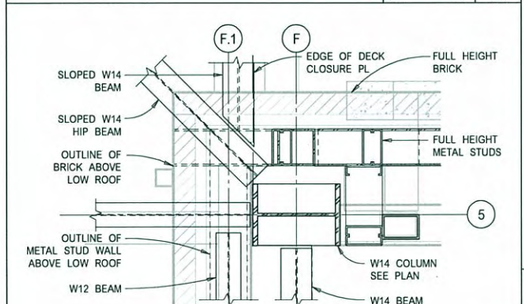


PLAN DETAIL — SCALE: 1" = 1'-0" — KPFF K0000 — 10 S7.1

NOT FOR CONSTRUCTION


kpff
Consulting Engineers
221 Main Street, Suite 800
San Francisco, California 94105
T: 415.989.1004 F: 415.989.1552
www.kpff.com ftp.kpff-sf.com


MOUNTAIN VIEW FIRE STATION #5

2195 N SHORELINE BLVD
MOUNTAIN VIEW, CA

Date 12.23.09

PERMIT SET

Sheet Title:
ROOF FRAMING DETAILS

Drawn By: Author
Checked By: Checker
Job Number: K108190

Sheet S7.1

PIN #-7779-1_S7.1

## DRAWING SHEET INDEX

| SHEET NO | SHEET NAME | 90% S.D. | 50% D.D. | 90% D.D. | 50% CD | PERMIT |
|---|---|---|---|---|---|---|
| GENERAL | | | | | | |
| T1.01 | TITLE SHEET | * | * | * | * | * |
| T1.02 | ABBREVIATIONS AND GENERAL NOTES | * | * | * | * | * |
| T1.03 | CODE ANALYSIS | * | * | * | * | * |
| T1.04 | LEED(TM) SILVER STRATEGY | * | * | * | * | * |
| T1.05 | DRAFT PHASING PLAN | | | | * | * |
| CIVIL | | | | | | |
| C1.0 | CONSTRUCTION NOTES | * | * | * | * | * |
| C2.0 | EXISTING CONDITIONS | * | * | * | * | * |
| C3.0 | DEMOLITION PLAN | * | * | * | * | * |
| C4.0 | GRADING AND DRAINAGE PLAN | * | * | * | * | * |
| C4.1 | SITE SECTIONS | | | * | * | * |
| C5.0 | UTILITY PLAN | * | * | * | * | * |
| C6.0 | STORMWATER MANAGEMENT PLAN | | | * | * | * |
| C6.1 | STORMWATER MANAGEMENT PLAN | | | | * | * |
| C6.2 | STORMWATER MANAGEMENT CALCULATIONS | | | * | * | * |
| C7.0 | CONSTRUCTION DETAILS | | | | * | * |
| C7.1 | CONSTRUCTION DETAILS | | | | * | * |
| GEOTECHNICAL | | | | | | |
| GP-1 | LEVEL 1 FLOOR PLAN WITH VENT PIPING LAYOUT | * | * | * | * | * |
| GP-2 | LEVEL 2 FLOOR PLAN WITH VENT PIPE RISERS | * | * | * | * | * |
| GP-3 | ROOF PLAN WITH VENT PIPE PENETRATION | * | * | * | * | * |
| GP-4 | LEVEL 1 GAS DETECTION SENSOR LAYOUT | * | * | * | * | * |
| GP-5 | LEVEL 2 GAS DETECTION SENSOR LAYOUT | * | * | * | * | * |
| GP-6 | DETAILS 1 | * | * | * | * | * |
| GP-7 | DETAILS 2 | * | * | * | * | * |
| LANDSCAPE | | | | | | |
| L0.1 | TREE PROTECTION AND DEMOLITION PLAN | * | * | * | * | * |
| L1.0 | MATERIALS PLAN | * | * | * | * | * |
| L1.1 | LAYOUT PLAN | | | | * | * |
| L2.0 | PLANTING LEGEND & PLAN | * | * | * | * | * |
| L2.1 | PLANTING DETAILS | | | | * | * |
| L2.2 | SOIL PREPARATION PLAN | | | | | * |
| L3.01 | IRRIGATION LEGEND | * | * | * | * | * |
| L3.02 | IRRIGATION NOTES | * | * | * | * | * |
| L3.03 | IRRIGATION PLAN | * | * | * | * | * |
| L3.04 | IRRIGATION BUBBLER PLAN | | | | * | * |
| L3.05 | IRRIGATION DETAILS | | | | * | * |
| L3.06 | IRRIGATION DETAILS | | | | * | * |
| L3.07 | IRRIGATION DETAILS | | | | * | * |
| L3.08 | IRRIGATION DETAILS | | | | | * |
| L3.10 | IRRIGATION REFERANCE DRAWING | | | * | * | * |
| L3.11 | IRRIGATION REFERENCE DRAWING | | | | | * |
| L4.0 | CONSTRUCTION DETAILS | * | * | * | * | * |
| L4.1 | CONSTRUCTION DETAILS | * | * | * | * | * |
| L4.2 | CONSTRUCTION DETAILS | * | * | * | * | * |
| L4.3 | CONSTRUCTION DETAILS | | | | * | * |
| L4.4 | CONSTRUCTION DETAILS | | | | * | * |
| L4.5 | CONSTRUCTION DETAILS | | | | | * |
| L4.6 | CONSTRUCTION DETAILS | | | | | * |
| ARCHITECTURAL | | | | | | |
| A1.01 | ARCHITECTURAL SITE PLAN | * | * | * | * | * |
| A2.01 | LEVEL 1 FLOOR PLAN | * | * | * | * | * |
| A2.1B | LEVEL 1 SLAB PLAN | | * | * | * | * |
| A2.02 | LEVEL 2 FLOOR PLAN | * | * | * | * | * |
| A2.2B | LEVEL 2 SLAB PLAN | | * | * | * | * |
| A2.04 | ROOF PLAN | * | * | * | * | * |
| A3.00 | EXTERIOR VIEWS | * | * | * | * | * |
| A3.01 | EXTERIOR ELEVATIONS | * | * | * | * | * |
| A3.02 | EXTERIOR ELEVATIONS | * | * | * | * | * |
| A3.03 | BUILDING ELEVATIONS- PARTIAL | * | * | * | * | * |
| A3.10 | BUILDING SECTIONS | * | * | * | * | * |
| A3.20 | WALL SECTIONS | | * | * | * | * |
| A3.21 | WALL SECTIONS | * | * | * | * | * |
| A3.22 | WALL SECTIONS | * | * | * | * | * |
| A3.23 | WALL SECTIONS | | * | * | * | * |
| A3.24 | WALL SECTIONS | | * | * | * | * |
| A3.25 | WALL SECTIONS | | * | * | * | * |
| A4.01 | ENLARGED PLANS AND ELEVATIONS | | * | * | * | * |
| A4.02 | ENLARGED PLANS AND ELEVATIONS | | * | * | * | * |
| A4.03 | ENLARGED LOBBY PLAN, ELEVATIONS, AND DETAILS | | | | | * |
| A4.05 | LEVEL 1 FINISH & SIGNAGE FLOOR PLAN | | * | * | * | * |
| A4.06 | LEVEL 2 FINISH & SIGNAGE FLOOR PLAN | | * | * | * | * |
| A5.01 | INTERIOR ELEVATIONS | | * | * | * | * |
| A5.02 | INTERIOR ELEVATIONS | | * | * | * | * |
| A5.03 | INTERIOR ELEVATIONS | | | | * | * |
| A5.04 | INTERIOR ELEVATIONS | | * | * | * | * |
| A5.05 | INTERIOR ELEVATIONS | | * | * | * | * |
| A5.06 | INTERIOR ELEVATIONS | | | | * | * |
| A5.07 | INTERIOR ELEVATIONS | | | | * | * |
| A5.08 | INTERIOR ELEVATIONS | | | | * | * |
| A6.01 | LEVEL 1- REFLECTED CEILING PLAN | * | * | * | * | * |
| A6.02 | LEVEL 2- REFLECTED CEILING PLAN | * | * | * | * | * |
| A7.01 | STAIR PLANS AND SECTIONS | | * | * | * | * |
| A7.02 | STAIR DETAILS | | | | * | * |
| A8.01 | EXTERIOR WALL & ROOF ASSEMBLY, BLDG WATERPROOFING DIAGRAM | | * | * | * | * |
| A8.11 | EXTERIOR DETAILS - FOUNDATION & WALL | | | * | * | * |
| A8.12 | EXTERIOR GUARDRAIL | | | | * | * |
| A8.15 | ENLARGED GENERATOR AND UTILITY BUILDING PLANS AND ELEV. | | | | * | * |
| A8.16 | EXT SIGNAGE DETAILS | | | | | * |
| A8.21 | EXTERIOR DETAILS - WALL & CAST STONE | | * | * | * | * |
| A8.22 | EXTERIOR DETAILS - WALL | | * | * | * | * |
| A8.23 | EXTERIOR DETAILS - WALL | | | | * | * |
| A8.31 | EXTERIOR DETAILS - WINDOWS | | | * | * | * |
| A8.32 | EXTERIOR DETAILS - WINDOWS | | | | * | * |
| A8.33 | EXTERIOR DETAILS - WINDOWS & LOUVERS | | | | * | * |
| A8.41 | EXTERIOR DETAILS - DOORS | | | * | * | * |
| A8.51 | EXTERIOR DETAILS - ROOF | | * | * | * | * |

## DRAWING SHEET INDEX

| SHEET NO | SHEET NAME | 90% S.D. | 50% D.D. | 90% D.D. | 50% CD | PERMIT |
|---|---|---|---|---|---|---|
| A8.52 | EXTERIOR DETAILS - ROOF | | | | * | * |
| A8.53 | EXTERIOR DETAILS - ROOF | | | | * | * |
| A9.01 | PARTITION TYPES AND DETAILS | | | | * | * |
| A9.02 | PARTITION DETAILS | | | | * | * |
| A9.03 | PARTITION DETAILS | | | | * | * |
| A9.04 | INTERIOR DETAILS- FLOOR TRANSITION DETAILS | | | | * | * |
| A9.05 | INTERIOR DETAILS- WALL AND COLUMN DETAILS | | | | * | * |
| A9.06 | INTERIOR DETAILS- DOORS & WINDOWS | | | | * | * |
| A9.07 | INTERIOR DETAILS- CEILINGS | | | | * | * |
| A9.10 | SIGNAGE DETAILS | | * | * | * | * |
| A10.01 | CASEWORK PLANS AND ELEVATIONS | | * | * | * | * |
| A10.02 | CASEWORK PLANS AND ELEVATIONS | | * | * | * | * |
| A10.03 | CASEWORK DETAILS | | | | * | * |
| A10.04 | CASEWORK DETAILS | | | | | * |
| A11.01 | MATERIAL & ROOM FINISH SCHEDULE | * | * | * | * | * |
| A11.02 | DOOR TYPE & SCHEDULES | | * | * | * | * |
| A11.03 | WINDOW & LOUVER SCHEDULES | | * | | * | * |
| STRUCTURAL | | | | | | |
| S0.1 | TITLE PAGE & SHEET INDEX | | | * | * | * |
| S1.1 | GENERAL NOTES | | | * | * | * |
| S1.1A | GENERAL NOTES | | | * | * | * |
| S1.2 | TYPICAL DETAILS- CONCRETE | * | * | * | * | * |
| S1.3 | TYPICAL DETAILS | | | | | * |
| S2.1 | FOUNDATION PLAN | * | * | * | * | * |
| S2.2 | SECOND LEVEL FRAMING PLAN | * | * | * | * | * |
| S2.3 | ROOF FRAMING PLAN | * | * | * | * | * |
| S2.4 | HIGH ROOF FRAMING PLAN | | | | | * |
| S3.1 | FOUNDATION DETAILS | * | * | * | * | * |
| S3.2 | FOUNDATION DETAILS | | | | * | * |
| S4.1 | BUILDING SECTION | * | * | * | * | * |
| S4.2 | BUILDING SECTION | | * | * | * | * |
| S4.3 | MOMENT FRAME ELEVATIONS | | * | * | * | * |
| S4.4 | MOMENT FRAME ELEVATIONS | | * | * | * | * |
| S4.5 | BRACE FRAME ELEVATIONS | | * | * | * | * |
| S4.6 | BRACE FRAME ELEVATIONS | | * | * | * | * |
| S4.7 | MOMENT FRAME DETAILS | | | | | * |
| S4.8 | MOMENT FRAME DETAILS | | | | | * |
| S4.9 | MOMENT FRAME DETAILS | | | | | * |
| S4.10 | WALL SECTIONS AND DETAILS | | | | * | * |
| S4.11 | WALL SECTIONS & DETAILS | | | | | * |
| S4.12 | WALL SECTIONS & DETAILS | | | | | * |
| S4.13 | WALL SECTIONS & DETAILS | | | | | * |
| S5.1 | TYPICAL DETAILS | * | * | * | * | * |
| S5.2 | METAL DECK DETAILS | * | * | * | * | * |
| S5.3 | STEEL FRAMING DETAILS | * | * | * | * | * |
| S5.4 | STEEL FRAMING DETAILS | * | * | * | * | * |
| S5.5 | FLOOR FRAMING DETAILS | * | * | | * | * |
| S6.1 | EXTERIOR METAL STUD DETAILS | | | | | * |
| S6.2 | EXTERIOR METAL STUD DETAILS | | | | | * |
| S6.3 | FLOOR FRAMING DETAILS | | | | | * |
| S7.1 | ROOF FRAMING DETAILS | | | | | * |
| S7.2 | ROOF FRAMING DETAILS | | | | | * |
| S7.3 | ROOF FRAMING DETAILS | | | | | * |
| MECHANICAL | | | | | | |
| M1.1 | MECHANICAL LEGEND,SCHEDULE & DETAILS | | * | * | * | * |
| M2.1 | FIRST FLOOR MECHANICAL PLAN | * | * | * | * | * |
| M2.2 | SECOND FLOOR MECHANICAL PLAN | * | * | * | * | * |
| M2.3 | ROOF MECHANICAL PLAN | * | * | * | * | * |
| PLUMBING | | | | | | |
| P1.1 | PLUMBING LEGEND, SCHEDULES AND DETAILS | * | * | * | * | * |
| P1.2 | PLUMBING DETAILS | | | | * | * |
| P2.1 | FIRST FLOOR PLUMBING PLAN | * | * | * | * | * |
| P3.1 | PARTIAL FIRST FLOOR PLUMBING PLAN | * | * | * | * | * |
| P3.2 | PARTIAL SECOND FLOOR PLUMBING PLAN | | | | * | * |
| ELECTRICAL | | | | | | |
| E0.1 | SYMBOLS LIST, GENERAL NOTES & LIST OF DRAWINGS | * | * | * | * | * |
| E0.2 | LUMINAIRE SCHEDULE | | | | * | * |
| E1.1 | SITE PLAN- ELECTRICAL | * | * | * | * | * |
| E1.2 | SITE PLAN- DEMOLITION & RELOCATION | | * | * | * | * |
| E2.1 | FIRST FLOOR PLAN - LIGHTING | | | * | * | * |
| E2.2 | SECOND FLOOR PLAN - LIGHTING | | | * | * | * |
| E3.1 | FIRST FLOOR PLAN - POWER | | * | * | * | * |
| E3.2 | SECOND FLOOR PLAN - POWER | | * | * | * | * |
| E3.3 | FIRST FLOOR PLAN - SIGNAL & COMUNICATIONS | | * | * | * | * |
| E3.4 | SECOND FLOOR PLAN - SIGNAL & COMUNICATIONS | | * | * | * | * |
| E3.5 | FIRST FLOOR PLAN-ELECTRICAL CONNECTIONS TO MECHANICAL EQUIPMENT | | | | * | * |
| E3.6 | SECOND FLOOR PLAN-ELECTRICAL CONNECTIONS TO MECHANICAL EQUIPMENT | | | | * | * |
| E4.1 | PARTIAL PLANS- ELECTRICAL | * | * | * | * | * |
| E4.2 | PARTIAL PLANS - ELECTRICAL | | | * | * | * |
| E5.1 | SINGLE LINE DIAGRAM | * | * | * | * | * |
| E5.2 | SINGLE LINE DIAGRAM - DEMO & RELOCATION | | * | * | * | * |
| E5.3 | SINGLE LINE DIAGRAM - FIRE ALARM | | * | * | * | * |
| E5.4 | SINGLE LINE DIAGRAMS- VOICE & DATA | | | | | * |
| E5.5 | RISER DIAGRAM ELECTRICAL | | | | | * |
| E5.6 | FIRE STATION ALERTING SYSTEM DIAGRAMS | | | | | * |
| E5.7 | FIRE STATION ALERTING SYSTEM DIAGRAMS | | | | | * |
| E5.8 | DIAGRAMS | | | | | * |
| E6.1 | PANEL SCHEDULES | | | | * | * |
| E7.1 | DETAILS | | * | * | * | * |
| E7.2 | DETAILS | | * | * | * | * |
| E7.3 | DETAILS | | | * | * | * |
| E7.4 | DETAILS | | | * | * | * |
| E7.5 | DETAILS | | | | * | * |
| TRAFFIC SIGNAL | | | | | | |
| TS1.0 | TRAFFIC SIGNAL PLAN | | * | | | * |
| TS2.0 | TRAFFIC SIGNAL CONDUCTOR AND POLE SCHEDULES | | * | | | * |

NOT FOR CONSTRUCTION

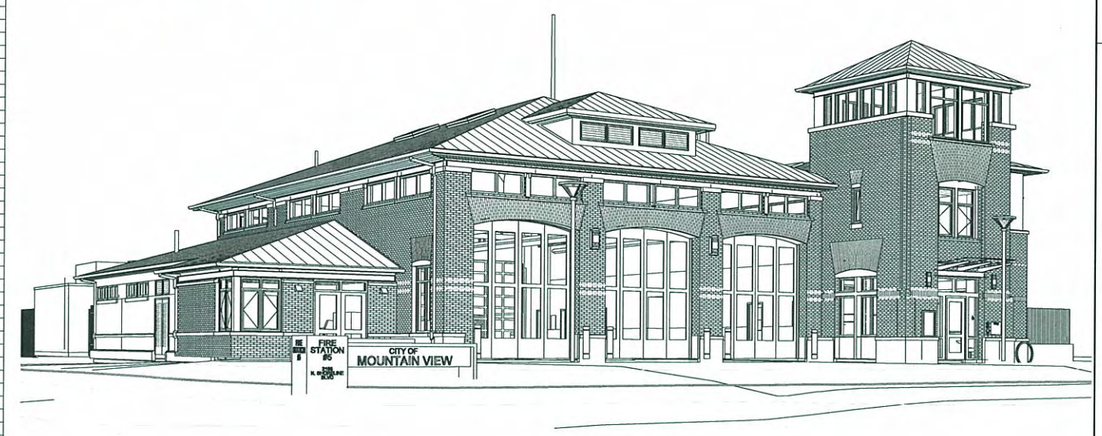


# MOUNTAIN VIEW FIRE STATION No. 5

PROJECT No. 03-23

## PROJECT DIRECTORY


**CLIENT**

**Fred Fallah, AIA**
Public Works Department
City of Mountain View
500 Castro Street
Mountain View, CA 94039-7540
650-903-6528
FAX: 650-963-3033
fred.fallah@mountainview.gov

**CIVIL**

**John Morozumi**
BKF Engineers
1650 Technology Drive, Suite 650
San Jose, CA 95110
408.467.9100
FAX : 408.467-9199
MBurley@BKF.com

**ARCHITECT**

**George Janson,** AIA,LEED AP
**David Ross,** AIA,LEED AP
BSA Architects
501 Flosom St
4th Floor
San Francisco, CA 94105
415. 281. 4720 x221
FAX: 415 281 4721
gjanson@bsaarchitects.com
dross@bsaarchitects.com

**ARBORIST**

**Ray Morneau Arborist**
550 South Shoreline Blvd
Mountain View, CA 94041
650 . 964 . 7664
rmarborist@aol.com

**LANDSCAPE**

**Alvin Tang**
**Vince Lattanzio**
Carducci Associates
555 Beach Street, 4th Floor
San Francisco, CA 94133
415. 674. 0990
FAX: 415. 674. 0999
alvin@carducciassociates.com
vince@carducciassociates.com

**STRUCTURAL**

**Blake Dilsworth**
**Lisa Tse,** LEED AP
KPFF Consulting Engineers
1160 Battery Street
San Francisco, CA 94111
415.989.1004
FAX: 415.989.1552
blake.dilsworth@kpff-sf.com
lisa.tse@kpff-sf.com

**MECHANICAL**

**John Cross**
**Mike Lefler,** LEED AP
Lefler Engineering, Inc.
1651 Second Street
San Rafael, CA 94901
415. 456. 4220
FAX: 415. 456. 1248
Cell: 415. 533. 9220
john@lefferengineering.com
mike@lefferengineering.com

**SPECIFICATIONS**

**John Patrick McCaffrey,** Architect PC
995 Carolina Street
San Francisco, CA 94107
415-695-9280
FAX: 415-695-7816
john@jpmccaffrey1.com

**ELECTRICAL**

**Paul Carey**
O'Mahony & Myer
4340 Redwood Highway #245
San Rafael, CA 94903
415. 492. 0420
FAX: 415. 479. 9662
pcarey@ommconsulting.com

**GEOTECHNICAL**

**David Seymour**
Kleinfelder Assoc
2011 North Capitol Avenue
San Jose, CA 95132
408. 586. 7611
Fax: 408. 586. 7688
dseymour@kleinfelder.com

**COST ESTIMATOR**

**Mark Kelley**
MACK5
1900 Powell Street Suite 470
Emeryville, CA 94608
(510) 595-3020
FAX: (510) 595-1755
markelley@mack5.com

**PHASE I/II ENVIRONMENTAL**

**Bill E. Zerbach**
ES Geotechnologies
446 South Hillview Dr
Milpitas, CA 95035-5464
408 . 934 . 9302
FAX: 408 . 946 . 4569


## LOCATION MAP

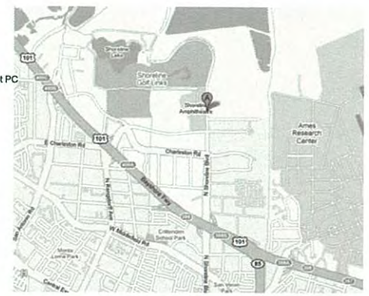


| BUILDING & SITE DATA Refer to T1.02 & A1.01 For reference only | | |
|---|---|---|
| CONSTRUCTION TYPE: | V-B | |
| OCCUPANCY CLASSIFICATION : | R-2, S-2, B | |
| GROSS BUILDING AREA: | 9565 SF | |
| APPROX SITE AREA: (within property line & limit of work) | 46165 SF | |
| APPROX LANDSCAPE AREA: | 21271 SF | |
| APPROX OFF-SITE IMPROVEMENT AREA: (adjacent parking lot biofiltration) | 935 SF | |

CHECKED BY:

PROJECT ENGINEER DATE

RECOMMENDED FOR APPROVAL:

SENIOR PROJECT MANAGER DATE

RECOMMENDED FOR CONSTRUCTION:

ASSISTANT PUBLIC WORKS DIRECTOR DATE

RCE _____ EXP _____


BSA ARCHITECTS

BULL STOCKWELL ALLEN
A California Corporation
501 Folsom Street, Fourth Floor
San Francisco, CA 94105
415-281-4720


MOUNTAIN VIEW FIRE STATION #5
2195 N SHORELINE BLVD
MOUNTAIN VIEW, CA

Date 12 . 23 . 09

PERMIT SET

Sheet Title:
TITLE SHEET


© 2009 BSA Architects
" All drawings and written material appearing herein constitute the original and unpublished work of the architect and the same may not be duplicated, used, or disclosed without the written consent of the architect. "


Drawn By: AR
Checked By: Checker
Job Number: 20808.00

Sheet T1.01

12/23/2009 9:39:14 AM

C:\Local Files\MVFS_LOCAL_AR.rvt

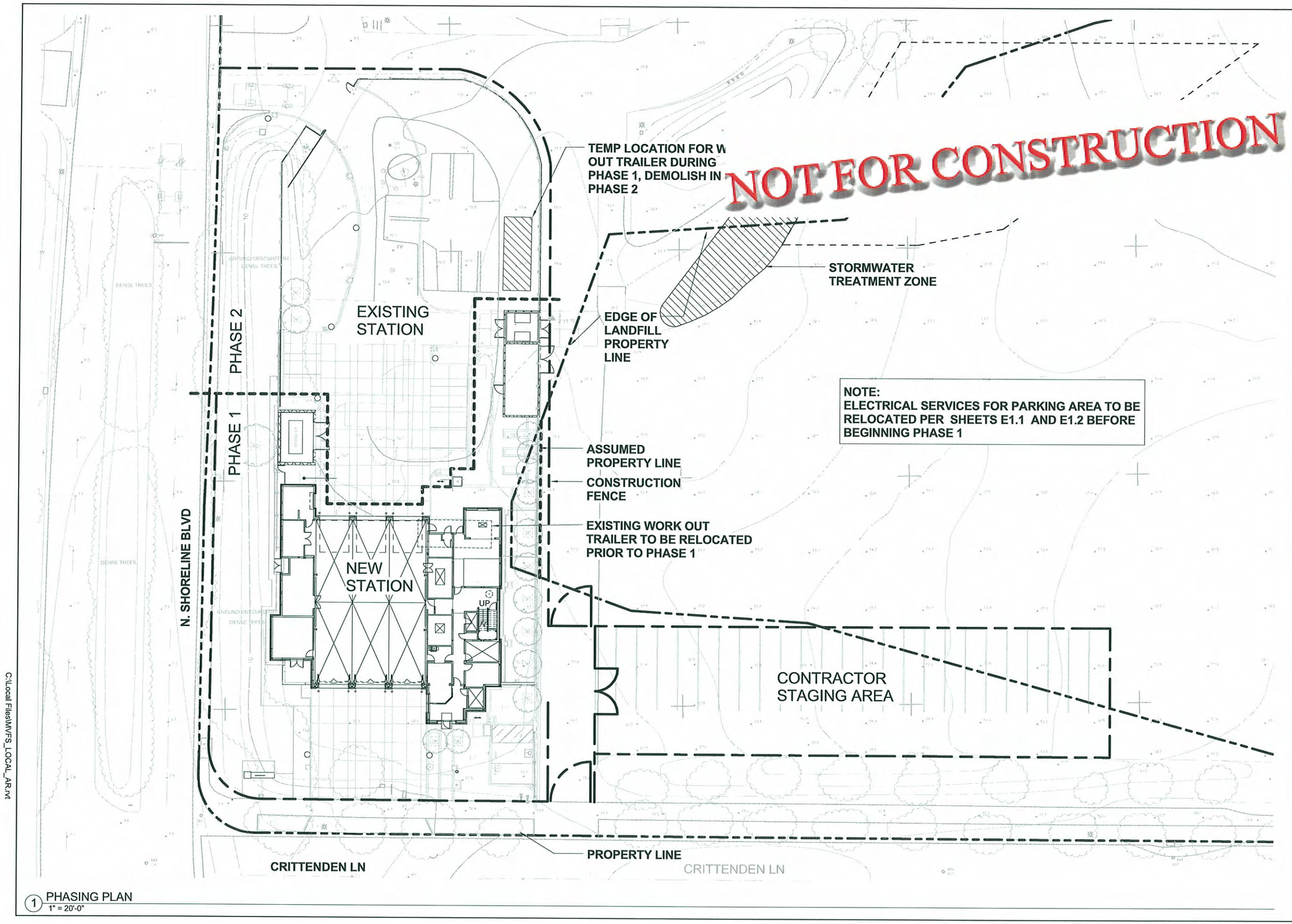


1 PHASING PLAN
1" = 20'-0"

C:\Local Files\MVFS_LOCAL_AR.rvt

BSA ARCHITECTS
BULL STOCKWELL ALLEN
A California Corporation
501 Folsom Street, Fourth Floor
San Francisco, CA 94105
415-281-4720

MOUNTAIN VIEW FIRE
STATION #5
2195 N SHORELINE BLVD
MOUNTAIN VIEW, CA

Date 12 . 23 . 09

PERMIT SET

Sheet Title:
DRAFT
PHASING PLAN

© 2009 BSA Architects
" All drawings and written material appearing herein constitute the original and unpublished work of the architect and the same may not be duplicated, used, or disclosed without the written consent of the architect. "

Drawn By: Author
Checked By: Checker
Job Number: 20808.00
Sheet T1.05

12/22/2009 4:30:19 PM

PIN#- 7779-1 T1.05

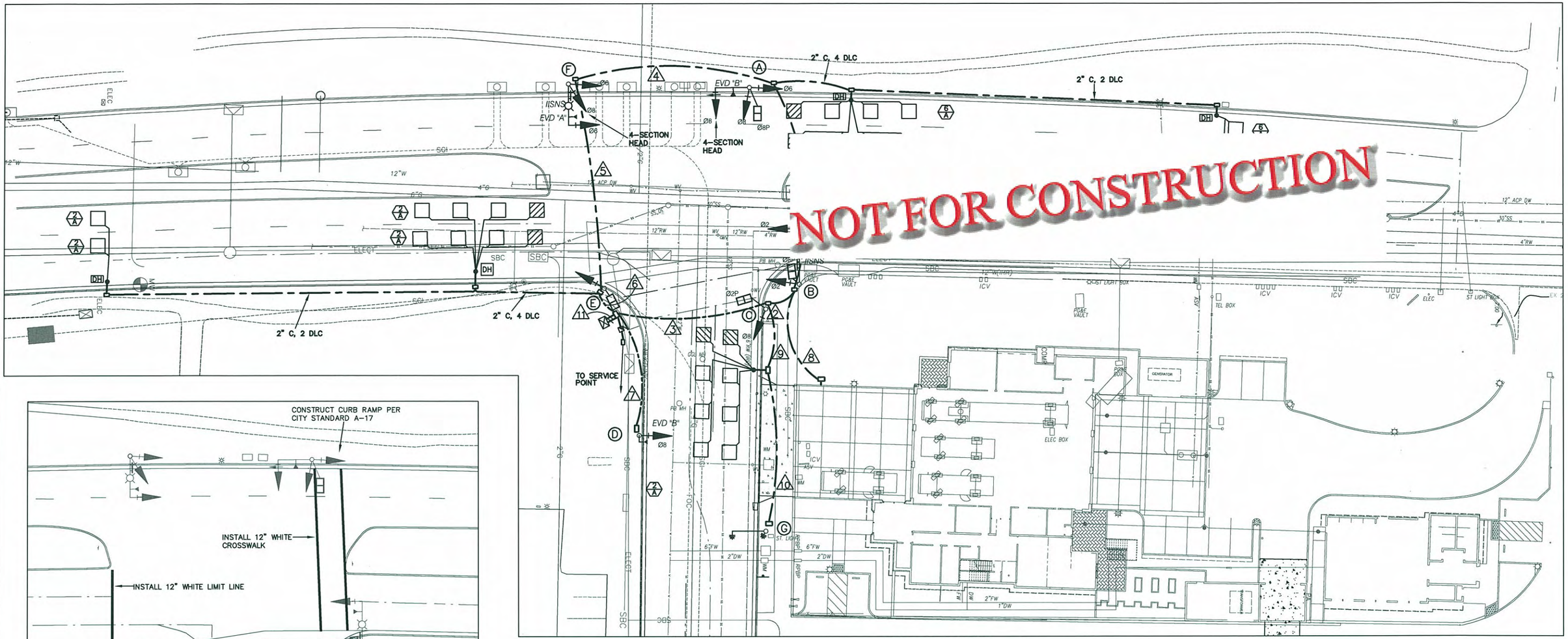


TRAFFIC SIGNAL PLAN

SCALE: 1"=20'

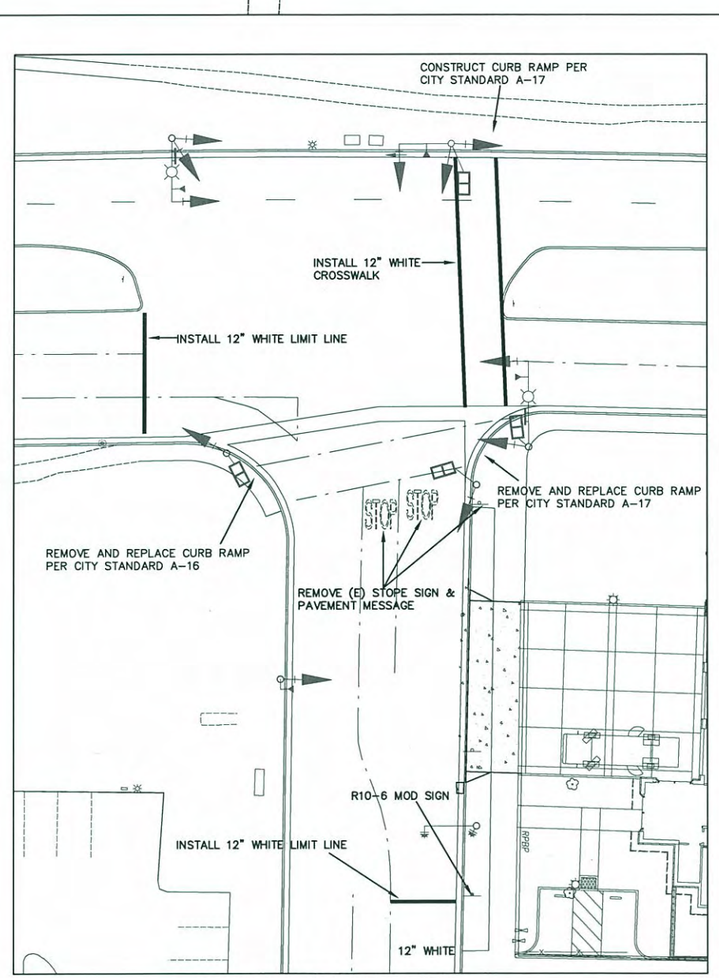


STRIPNG & CONSTRUCTION PLAN

SCALE: 1"=20'

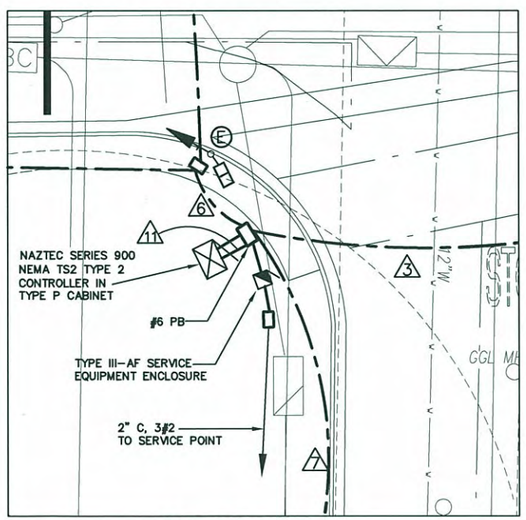


SERVICE DETAIL

SCALE: 1"=10'

PHASE DIAGRAM

R10-6 MOD (BLACK ON WHITE)

| REVISIONS | | | |
|---|---|---|---|
| NO. | DATE | DESCRIPTION | APR'VD |
| | | | |
| | | | |
| | | | |
| | | | |

CITY OF MOUNTAIN VIEW, CALIFORNIA
DEPARTMENT OF PUBLIC WORKS
500 CASTRO STREET, MOUNTAIN VIEW, CA 94041

# MOUNTAIN VIEW FIRE STATION No. 5
## PROJECT 03-23
## TRAFFIC SIGNAL PLANS

| | | |
|---|---|---|
| DESIGNED BY: QT, SF<br>DRAWN BY: QT | SCALE: NTS | DATE: 03-18-09 | SHEET: TS1.0 |
| CHECKED BY:<br>PROJECT ENGINEER DATE | RECOMMENDED FOR APPROVAL:<br>TRAFFIC ENGINEER DATE | APPROVED FOR CONSTRUCTION:<br>ASSISTANT PUBLIC WORKS DIRECTOR DATE<br>RCE_____ EXP._____ |